RIELLO

GB

Forced draught gas burners

Progressive two-stage or modulating operation

CE

RS BLU

CODE	MODEL	TYPE
20013995 - 20014018	RS 68/EV BLU	846 T2

Translation of the original instructions

Contents

1 Declarations . . . 3

2 Information and general warnings . . . 4
2.1 Information about the instruction manual . . . 4
2.1.1 Introduction . . . 4
2.1.2 General dangers . . . 4
2.1.3 Other symbols . . . 4
2.1.4 Delivery of the system and the instruction manual . . . 5
2.2 Guarantee and responsibility . . . 5

3 Safety and prevention . . . 6
3.1 Introduction . . . 6
3.2 Personnel training . . . 6

4 Technical description of the burner . . . 7
4.1 Burner designation . . . 7
4.2 Models available . . . 7
4.3 Technical data . . . 8
4.4 Electrical data . . . 8
4.5 . . . 8
4.6 . . . 8
4.7 Destination country - Gas category . . . 9
4.8 Burner weight . . . 9
4.9 Maximum dimensions . . . 9
4.10 Burner equipment . . . 10
4.11 Firing rates . . . 10
4.12 Test boiler . . . 11
4.13 Burner description . . . 12
4.14 Control box for air/fuel ratio (REC37.400A2) . . . 13
4.15 Servomotors . . . 15

5 Installation . . . 16
5.1 Notes on safety for the installation . . . 16
5.2 Handling . . . 16
5.3 Preliminary checks . . . 16
5.4 Operating position . . . 16
5.5 Preparing the boiler . . . 17
5.5.1 Introduction . . . 17
5.5.2 Boring the boiler plate . . . 17
5.5.3 Blast tube length . . . 17
5.6 Positioning the probe and electrode . . . 17
5.7 Securing the burner to the boiler . . . 18
5.7.1 Pre-calibrating the combustion head . . . 18
5.8 Combustion head adjustment . . . 19
5.9 Gas feeding . . . 20
5.9.1 Gas train . . . 20
5.9.2 Gas pressure . . . 21
5.9.3 Gas feeding line . . . 22
5.10 Electrical connections . . . 23
5.10.1 Rpm sensor adjustment . . . 24

6 Start-up, calibration and operation of the burner . . . 25

6.4 Final calibration of the pressure switches . . . 26
6.4.1 Air pressure switch . . . 26
6.4.2 Maximum gas pressure switch . . . 26
6.4.3 Minimum gas pressure switch . . . 26
6.4.4 PVP pressure switch kit . . . 27
6.5 Operator panel operation . . . 27
6.5.1 Description of the symbols on the display . . . 27
6.5.2 Description of the buttons . . . 28
6.5.3 Visualisation and programming mode . . . 28
6.5.3.1 Normal mode . . . 28
6.5.4 Reset procedure . . . 29
6.5.5 Manual lockout procedure . . . 29
6.5.6 Manual operation procedure . . . 29
6.5.6.1 Info mode . . . 30
6.5.6.2 Service mode . . . 30
6.5.6.3 Parameter mode . . . 31
6.5.7 Access procedure with password . . . 31
6.5.8 Parameter modification procedure . . . 32
6.5.9 Procedure for inserting and adjusting points on the modulation curve . . . 32
6.5.10 Backup/Restore . . . 33
6.5.11 Backup . . . 33
6.5.12 Restore . . . 34
6.5.13 Start-up procedure . . . 35
6.5.14 CALC function . . . 37
6.5.15 Modify acceleration - deceleration train . . . 37
6.5.16 List of parameters . . . 38
6.6 Operation sequence of the burner . . . 44
6.7 Burner adjustment . . . 45
6.7.1 Output upon ignition . . . 45
6.7.2 Maximum output . . . 45
6.7.3 Air adjustment . . . 45
6.7.4 Minimum output . . . 45
6.8 Operation . . . 45
6.9 Ignition failure . . . 45
6.10 Burner flame goes out during operation . . . 45
6.11 Stopping of the burner . . . 46
6.12 Measuring the ionisation current . . . 46
6.13 Checking the air and gas pressure on the combustion head . . . 46
6.14 Final checks (with burner operating) . . . 46

7 Faults - Possible causes - Solutions . . . 47
7.1 List of error codes . . . 47

8 Maintenance . . . 55
8.1 Notes on safety for the maintenance . . . 55
8.2 Maintenance programme . . . 55
8.2.1 Maintenance frequency . . . 55
8.2.2 Checking and cleaning . . . 55
8.3 Opening the burner . . . 56
8.4 Closing the burner . . . 56

A Appendix - Accessories . . . 57

B Appendix - Firing rate on basis of air density . . . 59

1 Declarations

Declaration of conformity in accordance with ISO / IEC 17050-1			
Manufacturer:	RIELLO S.p.A.		
Address:	Via Pilade Riello, 7 37045 Legnago (VR)		
Product:	Forced draught gas burner		
Model:	RS 68/EV BLU RS 120/EV BLU RS 160/EV BLU RS 200/EV BLU		
These products are in compliance with the following Technical Standards:			
EN 676			
EN 12100			
and according to the European Directives:			
GAD	2009/142/EC	Gas Devices Directive	
MD	2006/42/EC	Machine Directive	
LVD	2006/95/EC	Low Voltage Directive	
EMC	2004/108/EC	Electromagnetic Compatibility	
Such products are marked as follows:			
CE	CE-0085BS0267 CE-0085BS0268 CE-0085BS0266 CE-0085BT0419	Class 3 (EN 676) Class 3 (EN 676) Class 3 (EN 676) Class 3 (EN 676)	846 T2 847 T2 843 T2 1106 T2

The quality is guaranteed by a quality and management system certified in accordance with UNI EN ISO 9001.

Manufacturer's Declaration

RIELLO S.p.A. declares that the following products comply with the NOx emission limits specified by German standard "**1. BImSchV revision 26.01.2010**".

Product	Type	Model	Output
Forced draught gas burner	846 T2	RS 68/EV BLU	150-860 kW
	847 T2	RS 120/EV BLU	300-1300 kW
	843 T2	RS 160/EV BLU	300-1860 kW
	1106 T2	RS 200/EV BLU	570-2400 kW

Legnago, 04.09.2012

Burners Division Department
RIELLO S.p.A.

Eng. I. Zinna

Eng. Ruben Cattaneo

2 Information and general warnings

2.1 Information about the instruction manual

2.1.1 Introduction

The instruction manual supplied with the burner:

- ➤ is an integral and essential part of the product and must not be separated from it; it must therefore be kept carefully for any necessary consultation and must accompany the burner even if it is transferred to another owner or user, or to another system. If the manual is lost or damaged, another copy must be requested from the Technical Assistance Service of the area;
- ➤ is designed for use by qualified personnel;
- ➤ offers important indications and instructions relating to the installation safety, start-up, use and maintenance of the burner.

Symbols used in the manual

In some parts of the manual you will see triangular DANGER signs. Pay great attention to these, as they indicate a situation of potential danger.

2.1.2 General dangers

The **dangers** can be of **3 levels**, as indicated below.

DANGER

Maximum danger level!
This symbol indicates operations which, if not carried out correctly, cause serious injury, death or long-term health risks.

WARNING

This symbol indicates operations which, if not carried out correctly, may cause serious injury, death or long-term health risks.

CAUTION

This symbol indicates operations which, if not carried out correctly, may cause damage to the machine and/or injury to people.

2.1.3 Other symbols

DANGER

DANGER: LIVE COMPONENTS

This symbol indicates operations which, if not carried out correctly, lead to electric shocks with lethal consequences.

DANGER: FLAMMABLE MATERIAL

This symbol indicates the presence of flammable materials.

DANGER: BURNING

This symbol indicates the risks of burns due to high temperatures.

DANGER: CRUSHING OF LIMBS

This symbol indicates the presence of moving parts: danger of crushing of limbs.

DANGER: EXPLOSION

This symbol signals places where an explosive atmosphere may be present. An explosive atmosphere is defined as a mixture - under atmospheric conditions - of air and flammable substances in the form of gases, vapours, mist or dust in which, after ignition has occurred, combustion spreads to the entire unburned mixture.

PERSONAL PROTECTION EQUIPMENT

These symbols indicate the equipment that must be worn and kept by the operator for protection against threats against safety and/or health while at work.

OBLIGATION TO ASSEMBLE THE HOOD AND ALL THE SAFETY AND PROTECTION DEVICES

This symbol signals the obligation to reassemble the hood and all the safety and protection devices of the burner after any maintenance, cleaning or checking operations.

ENVIRONMENTAL PROTECTION

This symbol gives indications for the use of the machine with respect for the environment.

IMPORTANT INFORMATION

This symbol indicates important information that you must bear in mind.

➤ This symbol indicates a list.

Abbreviations used

Ch.	Chapter
Fig.	Figure
Page	Page
Sec.	Section
Tab.	Table

2.1.4 Delivery of the system and the instruction manual

When the system is delivered, it is important that:

➤ the instruction manual is delivered to the user by the system manufacturer, with the recommendation to keep it in the room where the heat generator is to be installed.

➤ The instruction manual shows:
- the serial number of the burner;

  .....

- the address and telephone number of the nearest Assistance Centre.

  .....
  .....
  .....

➤ The system supplier must carefully inform the user about:
- the use of the system;
- any further tests that may be required before activating the system;
- maintenance, and the need to have the system checked at least once a year by a representative of the manufacturer or another specialised technician.
  To ensure a periodic check, the manufacturer recommends the drawing up of a Maintenance Contract.

2.2 Guarantee and responsibility

The manufacturer guarantees its new products from the installation date, in accordance with the regulations in force and/or the sales contract. At the moment of the first start-up, check that the burner is integral and complete.

WARNING

Failure to observe the information given in this manual, operating negligence, incorrect installation and carrying out of non authorised modifications will result in the annulment by the manufacturer of the guarantee that it supplies with the burner.

In particular, the rights to the guarantee and the responsibility will no longer be valid, in the event of damage to things or injury to people, if such damage/injury was due to any of the following causes:

➤ incorrect installation, start-up, use and maintenance of the burner;
➤ improper, incorrect or unreasonable use of the burner;
➤ intervention of unqualified personnel;
➤ carrying out of unauthorised modifications on the equipment;
➤ use of the burner with safety devices that are faulty, incorrectly applied and/or not working;
➤ installation of untested supplementary components on the burner;
➤ powering of the burner with unsuitable fuels;
➤ faults in the fuel supply system;
➤ use of the burner even following an error and/or an irregularity;
➤ repairs and/or overhauls incorrectly carried out;
➤ modification of the combustion chamber with inserts that prevent the regular development of the structurally established flame;
➤ insufficient and inappropriate surveillance and care of those burner components most likely to be subject to wear and tear;
➤ the use of non-original components, including spare parts, kits, accessories and optional;
➤ force majeure.

The manufacturer furthermore declines any and every re-

3 Safety and prevention

3.1 Introduction

The burners have been designed and built in compliance with current regulations and directives, applying the known technical rules of safety and envisaging all the potential danger situations.

It is necessary, however, to bear in mind that the imprudent and clumsy use of the equipment may lead to situations of death risk for the user or third parties, as well as the damaging of the burner or other items. Inattention, thoughtlessness and excessive confidence often cause accidents; the same applies to tiredness and sleepiness.

It is a good idea to remember the following:

➤ The burner must only be used as expressly described. Any other use should be considered improper and therefore dangerous.

In particular:

it can be applied to boilers operating with water, steam, diathermic oil, and to other uses expressly named by the manufacturer; the type and pressure of the fuel, the voltage and frequency of the electrical power supply, the minimum and maximum deliveries for which the burner has been regulated, the pressurisation of the combustion chamber, the dimensions of the combustion chamber and the room temperature must all be within the values indicated in the instruction manual.

➤ Modification of the burner to alter its performance and destinations is not allowed.

➤ The burner must be used in exemplary technical safety conditions. Any disturbances that could compromise safety must be quickly eliminated.

➤ Opening or tampering with the burner components is not allowed, apart from the parts requiring maintenance.

➤ Only those parts envisaged by the manufacturer can be replaced.

WARNING

The manufacturer guarantees safety and proper functioning only if all burner components are intact and positioned correctly.

3.2 Personnel training

The user is the person, body or company that has acquired the machine and intends to use it for the specific purpose. He is responsible for the machine and for the training of the people working around it.

The user:

➤ undertakes to entrust the machine exclusively to suitably trained and qualified personnel;

➤ undertakes to inform his personnel in a suitable way about the application and observance of the safety instructions. With that aim, he undertakes to ensure that everyone knows the use and safety instructions for his own duties;

➤ Personnel must observe all the danger and caution indications shown on the machine.

➤ Personnel must not carry out, on their own initiative, operations or interventions that are not within their province.

➤ Personnel must inform their superiors of every problem or dangerous situation that may arise.

➤ The assembly of parts of other makes, or any modifications, can alter the characteristics of the machine and hence compromise operating safety. The manufacturer therefore declines any and every responsibility for any damage that may be caused by the use of non-original parts.

In addition:

➤ the user must take all the measures necessary to prevent unauthorised people gaining access to the machine

➤ the user must inform the manufacturer if faults or malfunctioning of the accident prevention systems are noticed, along with any presumed danger situation

➤ personnel must always use the personal protective equipment envisaged by legislation and follow the indications given in this manual

4 Technical description of the burner

4.1 Burner designation

Range: R

Fuel:

S	Natural gas
L	Light oil
LS	Light oil / Methane
N	Heavy oil

Size

Adjustment :

E	Electronic cam
EV	Electronic cam with variable speed (with Inverter)
M	Mechanical cam
P	Proportional air/gas valve

Emission :

...	Class 1 EN267 (light oil) - EN676 (gas)
MZ	Class 2 EN267 (light oil) - EN676 (gas)
BLU	Class 3 EN267 (light oil) - EN676 (gas)
MX	Class 1 EN267 (light oil) Class 3 EN676 (gas)

Head :

TC	Standard head
TL	Extended head

Flame control system:

FS1	Standard (1 stop every 24 h)
FS2	Continuous working (1 stop every 72 h)

Electrical supply of the system:

3/400/50	3N / 400V / 50Hz
3/230/50	3 / 230V / 50Hz
3/400-230/50	3N / 400V-230V / 50Hz

Voltage of auxiliaries:

230/50/60	230V / 50-60Hz
110/50/60	110V / 50-60Hz

R	S	68	EV	BLU	TC	FS1	3/400/50	230/50/60

BASIC DESIGNATION

EXTENDED DESIGNATION

4.2 Models available

Designation		Voltage	Code
RS 68/EV BLU	TC	3 ~ 400V - 50Hz	20013995
RS 68/EV BLU	TL	3 ~ 400V - 50Hz	20014018
RS 120/EV BLU	TC	3 ~ 400V - 50Hz	20010976
RS 120/EV BLU	TL	3 ~ 400V - 50Hz	20014609
RS 160/EV BLU	TC	3 ~ 400V - 50Hz	20010988
RS 160/EV BLU	TL	3 ~ 400V - 50Hz	20015253
RS 200/EV BLU	TC	3 ~ 400V - 50Hz	20006982

4.3 Technical data

Model			RS 68/EV BLU	RS 120/EV BLU	RS 160/EV BLU	RS 200/EV BLU
Type			846 T2	847 T2	843 T2	1106 T2
Output (1)	maximum	kW	350 - 860	600 - 1300	930 - 1860	1375 - 2400
		Mcal/h	301 - 740	516 - 1118	800 - 1600	1183 - 2064
	minimum	kW	150	300	300	570
		Mcal/h	130	258	258	490
Fuel			Natural gas: G20 - G25 - G31			
Gas pressure at max. output (2) - Gas: G20/G25		mbar	11.7 / 17.5	22.5 / 33.7	17.7 / 26.5	28 / 35.6
Gas pressure at max. output (2) - Gas: G31		mbar	-	19.6		
Operation			Intermittent (min. 1 stop in 24 hours)			
Standard applications			Boilers: water, steam, diathermic oil			
Ambient temperature		°C	0 - 40			
Combustion air temperature		°C max	60			
Noise levels (3)	Sound pressure	dB(A)	77	78.5	80.5	83
	Sound power		-	-	-	

(1) Reference conditions: Ambient temperature 20°C - Gas temperature 15°C - Barometric pressure 1013 mbar - Altitude 0 m a.s.l.
(2) Pressure at socket 22)(Fig. 5) with zero pressure in combustion chamber and at maximum burner output.
(3) Noise emission tests carried out as per Directive EN 15036-1, with measurement accuracy σ = ± 1.5 dB, in the manufacturer's combustion lab with burner operating on test boiler at maximum output.

4.4 Electrical data

Motor IE1

Model		RS 68/EV BLU	RS 120/EV BLU	RS 160/EV BLU	RS 200/EV BLU
Electrical supply		3 ~ 230-400 V 50 Hz / 1N ~ 230 V 50 Hz			
Fan motor	rpm	2830	2860	2860	2900
	kW	1,5	2,2	4,5	5,5
	V	230/400	230/400	230/400	230/400
	A	6,4/3,7	8,5/4,9	15,8/9,1	19,2/11,1
Ignition transformer	V1 - V2	230 V - 1 x 8 kV			
	I1 - I2	1 A - 20 mA			
Absorbed electrical power	kW max	1,5	2,2	4,5	6,5
Protection level		IP 44			

Motor IE2

Model		RS 68/EV BLU	RS 120/EV BLU	RS 160/EV BLU	RS 200/EV BLU
Electrical supply		3 ~ 230-400 V 50 Hz / 1N ~ 230 V 50 Hz			
Fan motor	rpm	2860	2860	2900	2910
	kW	1,5	2,2	4,5	5,5
	V	230/400	230/400	230/400	230/400
	A	5,5/3,4	7,9/4,6	15/8,7	18,2/10,5
Ignition transformer	V1 - V2	230 V - 1 x 8 kV			
	I1 - I2	1 A - 20 mA			
Absorbed electrical power	kW max	1,5	2,2	4,5	6,5
Protection level		IP 44			

4.5 Destination country - Gas category

Destination country	Gas category
AT - CH - CZ - DK - EE - ES - FI - GB - GR - HU IE - IS - IT - LT - LV - NO - PT - SE - SI - SK - TR	I_{2H}
DE	I_{2ELL}
NL	I_{2L}
FR	I_{2Er}
BE	$I_{2E(R)B}$
LU - PL	I_{2E}

4.6 Burner weight

The weight of the burner complete with its packaging is shown in the table.

Model	kg
RS 68/EV BLU	77 - 79
RS 120/EV BLU	83 - 85
RS 160/EV BLU	96 - 98
RS 200/EV BLU	101 - 103

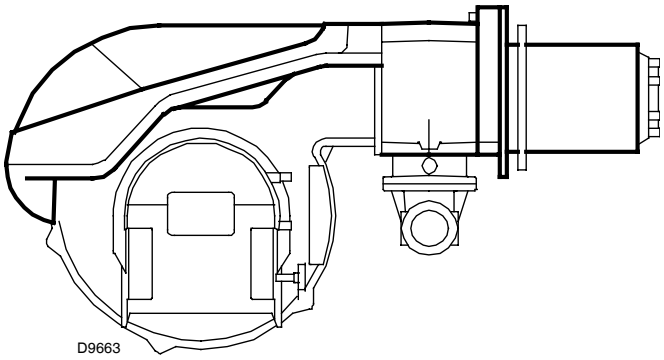

Fig. 1

4.7 Maximum dimensions

The maximum dimensions of the burner are shown in Fig. 2.
Bear in mind that inspection of the combustion head requires the burner to be opened and the rear part drawn back on the slide bars.
The dimensions of the open burner are indicated by position I.

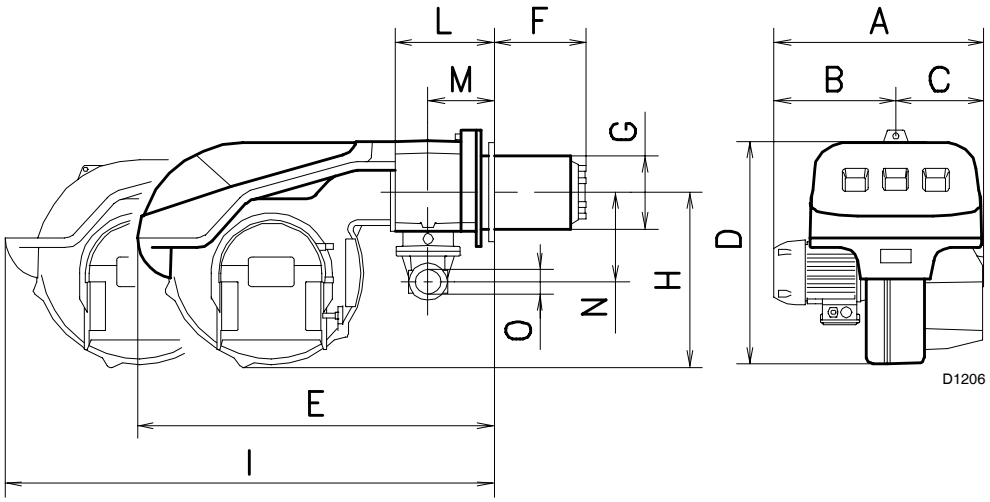

Fig. 2

mm	A	B	C	D	E	F (1)	G	H	I (1)	L	M	N	O
RS 68/EV BLU	511	312	215	555	840	255-390	189	430	1161-1296	214	134	221	2”
RS 120/EV BLU	553	338	215	555	840	255-390	186	430	1161-1296	214	134	221	2”
RS 160/EV BLU	681	366	315	555	872	373-503	222	430	1442-1587	230	141	260	2”

4.8 Burner equipment

Flange for gas train . . . . . No. 1
Gasket for flange . . . . . No. 1
Screws to fix the flange M10 x 35 . . . . . No. 4
Thermal insulation screen . . . . . No. 1
Screws to fix the burner flange to the boiler:
M12 x 35 . . . . . No. 4

PVP kit for leak detection control (1) . . . . . No. 1
Instructions . . . . . No. 1
Spare parts list . . . . . No. 1

(1) Supplied with RS 120-160-200/EV BLU. Optional accessory for RS 68/EV BLU - see Appendix B.

4.9 Firing rates

The **maximum output** is chosen within area A (and B for RS 120/EV BLU) of the diagram.

NOTE:
To use area B (RS 120/EV BLU) as well, the pre-calibration of the combustion head is necessary, as explained on page 19.

The **minimum output** must not be lower than the minimum limit of the diagram.

RS 200/EV BLU
The firing rate refers to operation with G20 - G25 fuel. When using G31, the minimum output changes from 570 to 630 kW.

WARNING

The firing rate value (Fig. 3) has been obtained considering an ambient temperature of 20°C, an atmospheric pressure of 1013 mbar (approx. 0 m a.s.l.), and with the combustion head adjusted as shown on page 19.

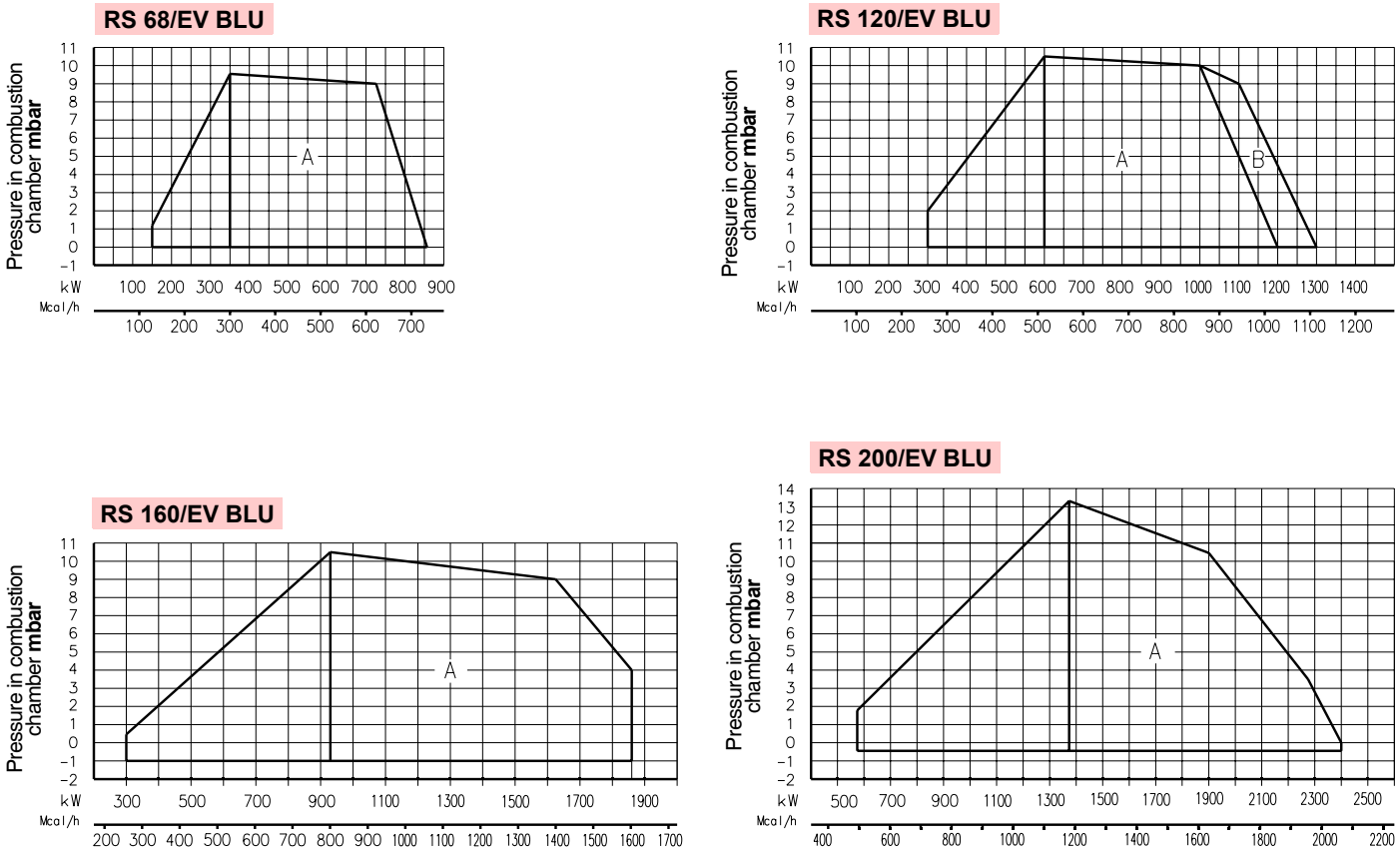

Fig. 3

4.10 Test boiler

The burner/boiler combination does not pose any problems if the boiler is EC approved and its combustion chamber dimensions are similar to those indicated in the diagram (Fig. 4).

If the burner must be combined with a boiler that has not been EC approved and/or its combustion chamber dimensions are clearly smaller than those indicated in the diagram (Fig. 4), consult the manufacturer.

The firing rates were set in relation to special test boilers, according to EN 676 regulations.

In (Fig. 4) you can see the diameter and length of the test combustion chamber.

Example
Output 756 kW - diameter 60 cm - length 2 m.

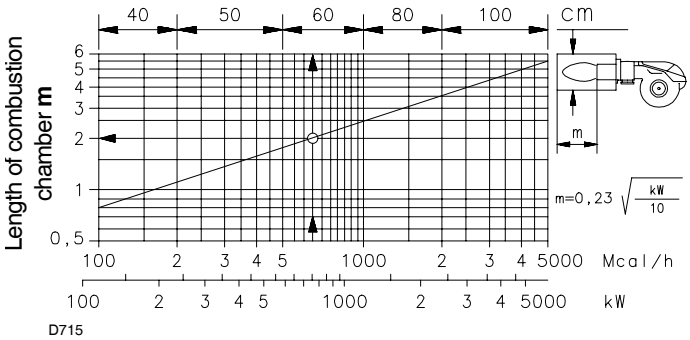

Fig. 4

4.11 Burner description

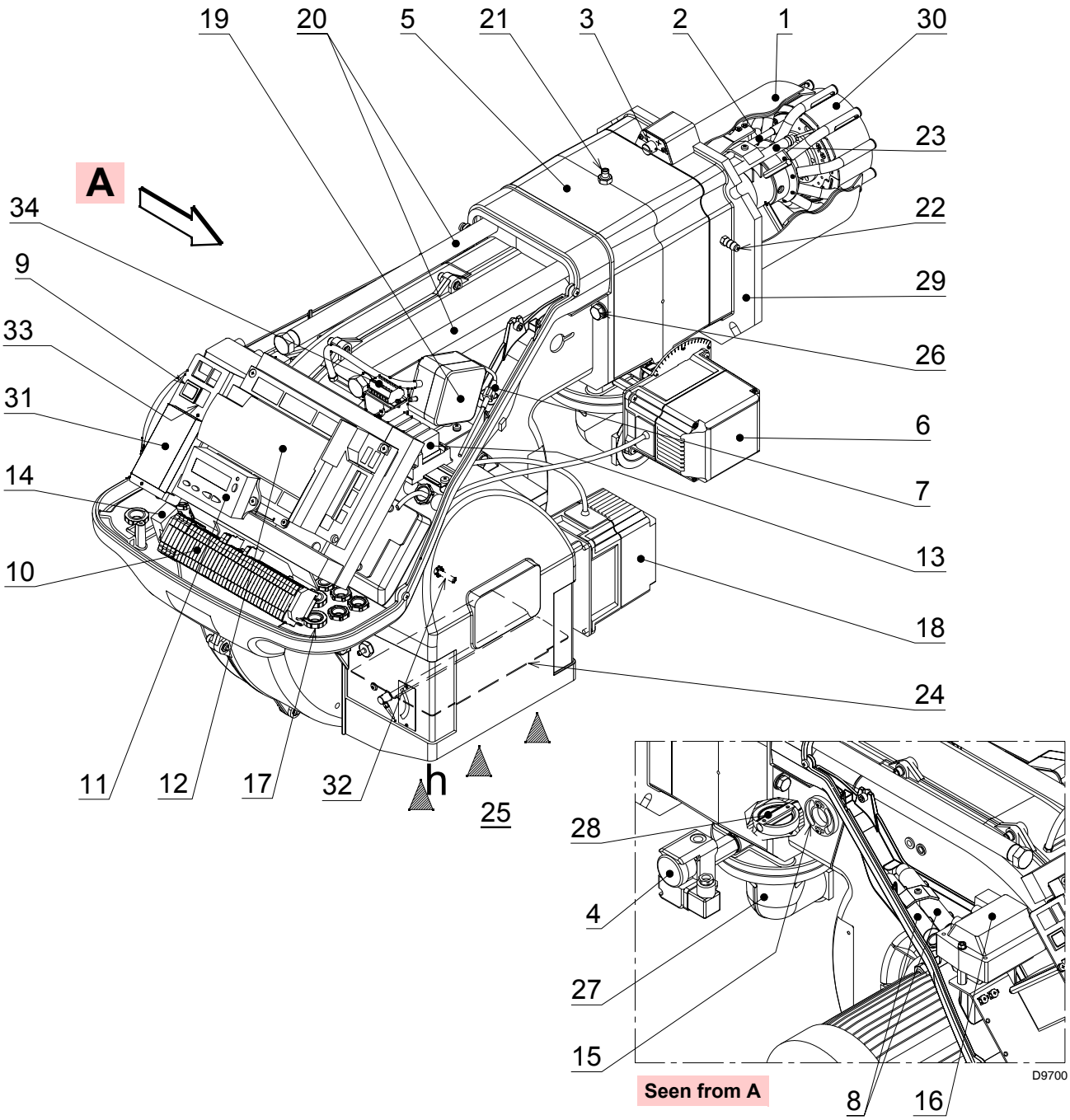

Fig. 5

1 Combustion head
2 Ignition electrode
3 Screw for combustion head adjustment
4 Maximum gas pressure switch
5 Pipe coupling
6 Gas servomotor
7 Plug-socket on ionisation probe cable
8 Extensions for slide bars 20) - only for TL versions
9 Operation on/off switch
10 Terminal board for electrical wiring
11 Operator panel with LCD display
12 Control box for checking flame and air/fuel ratio
13 Clean contact relay
19 Minimum air pressure switch (differential operating type)
20 Slide bars for opening the burner and inspecting the combustion head
21 Gas pressure test point and head fixing screw
22 Air pressure socket
23 Flame sensor probe
24 Air damper
25 Fan air inlet
26 Screws to secure fan to pipe coupling
27 Gas input pipe
28 Gas butterfly valve
29 Boiler fixing flange
30 Flame stability disk

4.12 Control box for air/fuel ratio (REC37.400A2)

Warnings

WARNING

To avoid accidents, material or environmental damage, observe the following instructions!

The REC37.400A2 control box is a safety device!
Avoid opening or modifying it, or forcing its operation.

Riello S.p.A. cannot assume any responsibility for damage resulting from unauthorised interventions!

Risk of explosion!
An incorrect configuration can provoke fuel overcharging, with the consequential risk of explosion!
The operators must be aware that the incorrect setting of the visualisation and operation control box, and of the positions of the fuel and/or air actuators, can cause dangerous conditions during burner operation.

➤ All interventions (assembly and installation operations, assistance, etc.) must be carried out by qualified personnel.
➤ Before modifying the wiring in the connection area, fully disconnect the system from the power supply (omnipolar separation). Check the system is not powered and cannot be accidentally reconnected. Failure to do this will lead to the risk of electrocution.
➤ Protection against electrocution from the control box and all connected electric components is obtained with the correct assembly.
➤ Before any intervention (assembly and installation operations, assistance, etc.), ensure the wiring is in order and that the parameters are correctly set, then make the safety checks.
➤ Falls and collisions can negatively affect the safety functions.
In this case, the control box must not be operated, even if it displays no evident damage.

Mechanical structure

The control box is a system to check the burners, based on a microprocessor and equipped with components to adjust and supervise medium and large capacity forced draught burners.
The control box contains the following components:

- Burner adjustment device with system for checking the seal of the gas valves
- Electronic device to check the fuel/air ratio with a maximum of 2 actuators
- Inverter to check fan air
- Modbus interface

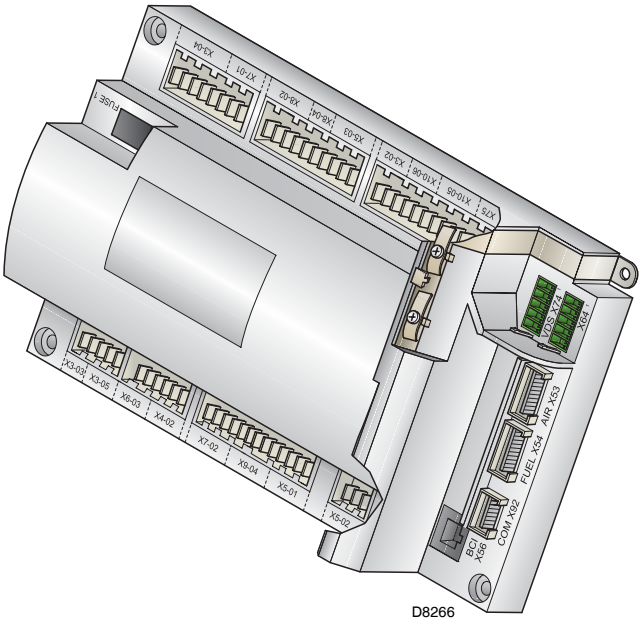

D8266

Fig. 6

Installation notes

- Always slide the cables at high voltage respecting the distance of the equipment and of the other cables as much as possible.
- Check the electric wiring inside the boiler complies with the national and local safety regulations.
- Do not confuse the powered conductors with the neutral ones.

Electrical wiring of the flame detector

It is important for signal transmission to be almost totally free of any disturbances or loss:

- Always separate the detector cables from the other cables:
  – The capacitive reactance of the line reduces the size of the flame signal.
  – Use a separate cable.
- Respect the allowed cable lengths.
- The ionisation probe is not protected against the risk of electrocution. When connected to the electricity supply, the ionisation probe must be protected against any accidental contact.
- Position the ignition electrode and the ionisation probe so that the ignition spark cannot form an arc on the probe (risk of electric overcharge).

Technical data

Control box REC37.400A2	Mains voltage	AC 230V -15% / +10%
	Mains frequency	50 / 60 Hz ± 6%
	Power absorption	< 30W (normal)
	Safety class	I, with components in compliance with II and III, according to DIN EN 60730-1
Load on 'input' terminals	F1 unit fuse (internal)	6.3 AT
	Main fuse of perm. network (external)	Max. 16 AT
	Undervoltage • Safety switch-off from operating position to mains voltage • Restart when mains voltage picks up	 Approx. AC 186 V Approx. AC 195 V
Load on 'output' terminals	**Total load on the contacts:** • Mains voltage • Input current (safety circuit) due to: - fan motor contact maker - ignition transformer - valves	 AC 230V, 50/60 Hz Max. 5A
	Load on a single contact: Fan motor contact maker • Mains voltage • Nominal current • Output factor	 AC 230V, 50/60 Hz 2A cosφ > 0.4
	Alarm output • Mains voltage • Nominal current • Output factor	 AC 230V, 50/60 Hz 1A cosφ > 0.4
	Ignition transformer • Mains voltage • Nominal current • Output factor	 AC 230V, 50/60 Hz 2A cosφ > 0.2
	Fuel gas valve • Mains voltage • Nominal current • Output factor	 AC 230V, 50/60 Hz 2A cosφ > 0.4
Cable length	Main line Display, BCI External reset button Other lines	Max. 100m (100 pF/m) Max. 3m (100 pF/m) Max. 20m (100 pF/m) Max. 3m (100 pF/m)
Environmental conditions	Operation Climatic conditions Mechanical conditions Temperature range Humidity	DIN EN 60721-3-1 Class 1K3 Class 1M2 -20...+60°C < 95% r.h.

4.13 Servomotors

Warnings

WARNING

To avoid accidents, material or environmental damage, observe the following instructions!

Avoid opening, modifying or forcing the actuators.

- ➤ All interventions (assembly and installation operations, assistance, etc.) must be carried out by qualified personnel.
- ➤ Before modifying the wiring in the system connection area, fully disconnect the burner control device from the power supply (omnipolar separation).
- ➤ To avoid the risk of electrocution, protect the connection terminals in a suitable manner and correctly fix the cover.
- ➤ Check the wiring is in order.
- ➤ Falls and collisions can negatively affect the safety functions. In this case, the unit must not be operated, even if it displays no evident damage.

Assembly notes

- Check the relevant national safety standards are respected.
- The connection between the actuator command shaft and the control element must be rigid, without any mechanical play.
- To avoid an excessive load on the bearings due to rigid hubs, the use of compensation clutches without any mechanical play is recommended (e.g. metal bellows-type clutches).

Installation notes

- Arrange the H.V. ignition cables separately, as far as possible from the control box and the other cables.
- The static torque is reduced when the electrical supply of the actuator is switched off.

WARNING

During the maintenance or replacement of the actuators, be careful not to invert the connectors.

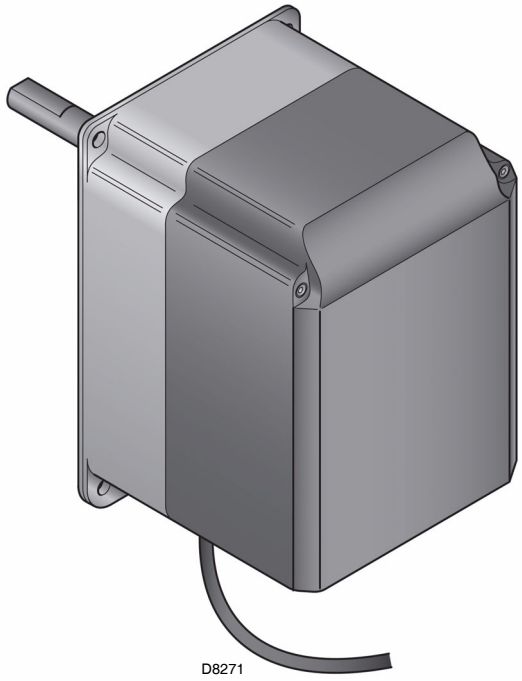

Fig. 7

Technical data

Model	SQM 33.418A9	SQM 33.519A9
Operating voltage	AC / DC 24V ± 20%	
Safety class	2 according to EN 60 730	
Power requirement	Max. 7.5W	Max. 10W
Protection level	IP 54 according to EN 60 529-1	
Cable connection	RAST2.5	
Rotation direction	- Anticlockwise (standard) - Clockwise (inverted rotation)	
Rated torque (max.)	1.2 Nm	3 Nm
Static torque (max.)	0.8 Nm	2.6 Nm
Cable length	3m	
Opening time 0-90°	min 5s. - max 120s. depending on the type of control box	
Weight	approx. 1.4 kg	
Environmental conditions:		
Operation	DIN EN 60 721-3-3	
Climatic conditions	Class 3K5	
Mechanical conditions	Class 3M4	
Temperature range	-20...+60°C	
Humidity	< 95% r.h.	

5 Installation

5.1 Notes on safety for the installation

After carefully cleaning all around the area where the burner will be installed, and arranging the correct lighting of the environment, proceed with the installation operations.

DANGER

All the installation, maintenance and disassembly operations must be carried out with the electricity supply disconnected.

WARNING

The installation of the burner must be carried out by qualified personnel, as indicated in this manual and in compliance with the standards and regulations of the laws in force.

5.2 Handling

The packaging of the burner includes a wooden platform, so it is possible to move the burner (still packaged) with a transpallet truck or fork lift truck.

WARNING

The handling operations for the burner can be highly dangerous if not carried out with the greatest attention: keep any unauthorised people at a distance; check the integrity and suitableness of the available means of handling.
Check also that the area in which you are working is empty and that there is an adequate escape area (i.e. a free, safe area to which you can quickly move if the burner should fall).
When handling, keep the load at not more than 20-25 cm from the ground.

CAUTION

After positioning the burner near the installation point, correctly dispose of all residual packaging, separating the various types of material.
Before proceeding with the installation operations, carefully clean all around the area where the burner will be installed.

5.3 Preliminary checks

Checking the consignment

CAUTION

After removing all the packaging, check the integrity of the contents. In the event of doubt, do not use the burner; contact the supplier.

The packaging elements (wooden cage or cardboard box, nails, clips, plastic bags, etc.) must not be abandoned as they are potential sources of danger and pollution; they should be collected and disposed of in the appropriate places.

Checking the characteristics of the burner

Check the identification label of the burner, showing:

- ➤ the model (**A**) (Fig. 8) and type of burner (**B**);
- ➤ the year of manufacture, in cryptographic form (**C**);
- ➤ the serial number (**D**);
- ➤ the data for electrical supply and the protection level (**E**);
- ➤ the absorbed electrical power (**F**);
- ➤ the types of gas used and the relative supply pressures (**G**);
- ➤ the data of the burner's minimum and maximum output possibilities (**H**) (see Firing rate)
  Warning. The output of the burner must be within the boiler's firing rate;
- ➤ the category of the appliance/countries of destination (**I**).

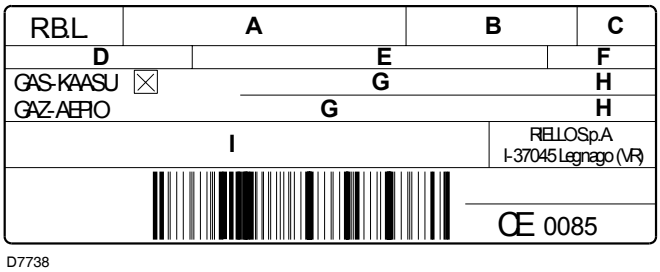

Fig. 8

WARNING

A burner label, or any other component, that has been tampered with, removed or is missing, prevents the definite identification of the burner and makes any installation or maintenance work difficult.

5.4 Operating position

The burner is designed to operate only in positions **1**, **2**, **3** and **4**.
Installation **1** is preferable, as it is the only one that allows the maintenance operations as described in this manual.
Installations **2**, **3** and **4** permit operation but make maintenance and inspection of the combustion head more difficult.
Any other position could compromise the correct operation of the appliance.
Installation **5** is prohibited for safety reasons.

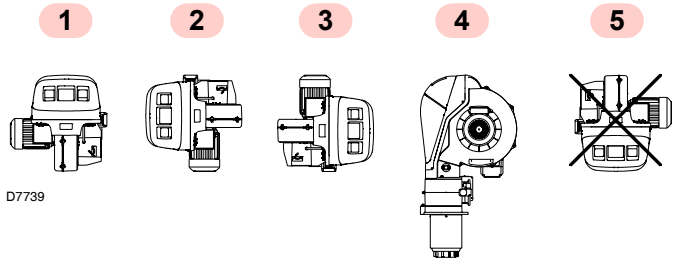

Fig. 9

5.5 Preparing the boiler

5.5.1 Introduction

The burners are suitable for working on both flame inversion boilers (in this case the long head model is recommended) and boilers with a combustion chamber and bottom runoff (three flue gas circulations), from which the best results of low NOx emissions are obtained.

The maximum thickness of the front hatch of the boiler A), (Fig. 10), complete with refractory, must not exceed:

- 200 mm for RS 68-120/EV BLU;
- 250 mm for RS 160-200/EV BLU.

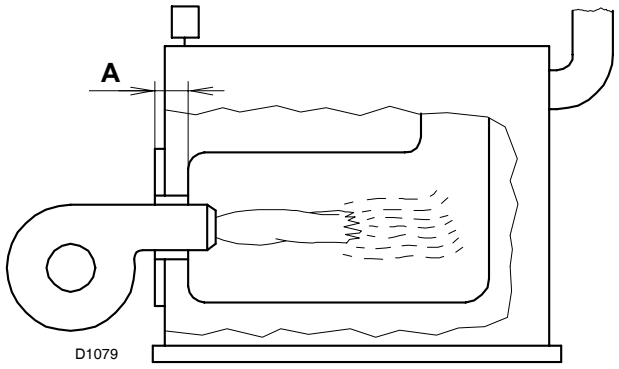

Fig. 10

5.5.2 Boring the boiler plate

Pierce the closing plate of the combustion chamber, as in (Fig. 11).

The position of the threaded holes can be marked using the thermal insulation screen supplied with the burner.

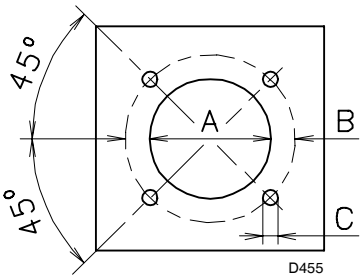

Fig. 11

mm	A	B	C
RS 68/EV BLU	195	275-325	M 12
RS 120/EV BLU	195	275-325	M 12
RS 160/EV BLU	230	325-368	M 16
RS 200/EV BLU	230	325-368	M 16

5.5.3 Blast tube length

The length of the blast tube 10)(Fig. 14) must be selected according to the indications provided by the boiler manufacturer, and in any case must be greater than the thickness of the boiler door complete with its refractory.

The available lengths L)(Fig. 14) are:

For boilers with front flue passes 13) or flame inversion chamber, a protection in refractory material 11) must be inserted between the boiler fettling 12) and the blast tube 10).

This protection must not compromise the extraction of the blast tube. For boilers with a water-cooled front, the refractory lining 11) and 12) is not necessary unless expressly requested by the boiler manufacturer.

5.6 Positioning the probe and electrode

WARNING

Before securing the burner to the boiler, check (through the opening of the blast tube) that the probe and electrode are correctly positioned, as in Fig. 12.

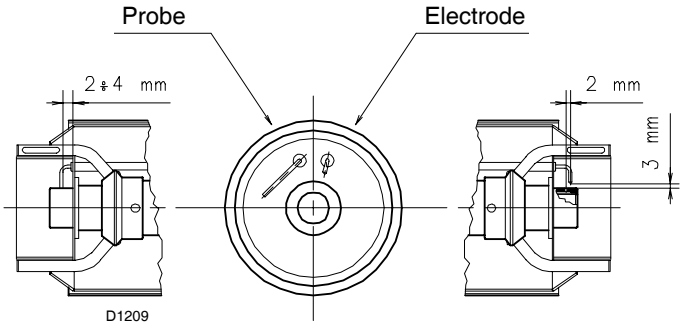

Fig. 12

If in the previous check the position of the probe or electrode was not correct, remove the screw 1) (Fig. 13) extract the inner part 2) of the head, and adjust them.

CAUTION

Do not rotate the probe: leave it as in Fig. 12. If it is located too close to the ignition electrode, it could damage the control box amplifier.

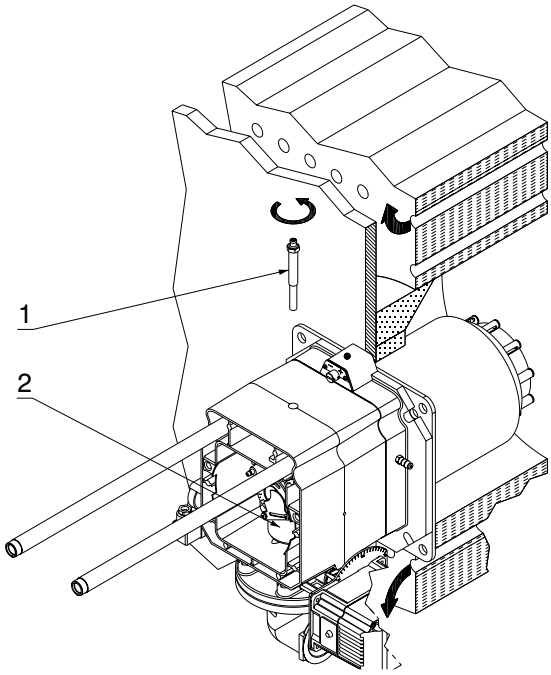

5.7 Securing the burner to the boiler

Separate the combustion head from the rest of the burner, Fig. 14.
To do this, proceed as follows:

- ➤ loosen the 4 screws 3) and remove the hood 1);
- ➤ remove screws 2) from the two slide bars 5);
- ➤ disconnect the plug 14), unscrew the cable grommet 15);
- ➤ disconnect the socket from the maximum gas pressure switch;
- ➤ remove the two screws 4);
- ➤ pull back the burner on the slide bars 5) by about 100 mm;
- ➤ disconnect the probe and electrode cables, then slide off the burner completely from the slide bars.

Before fixing the burner to the boiler, check (for the model RS 120/EV BLU) if its maximum output is included in area A or B of the firing rate. See Fig. 3.

If it is in area A, no intervention is required.

If it is in area B, it is necessary to pre-calibrate the combustion head, as described below.

Once this operation (if necessary) has been carried out, fix the flange 9)(Fig. 14) to the boiler plate, interposing the insulating gasket 8) supplied as standard equipment.

Use the 4 screws supplied, with a tightening torque of 35 - 40 Nm, after protecting their thread with anti-seize products.

The seal between burner and boiler must be airtight: after the start-up (see **"Start-up procedure"** on page 35), check there is no leakage of flue gases into the external environment.

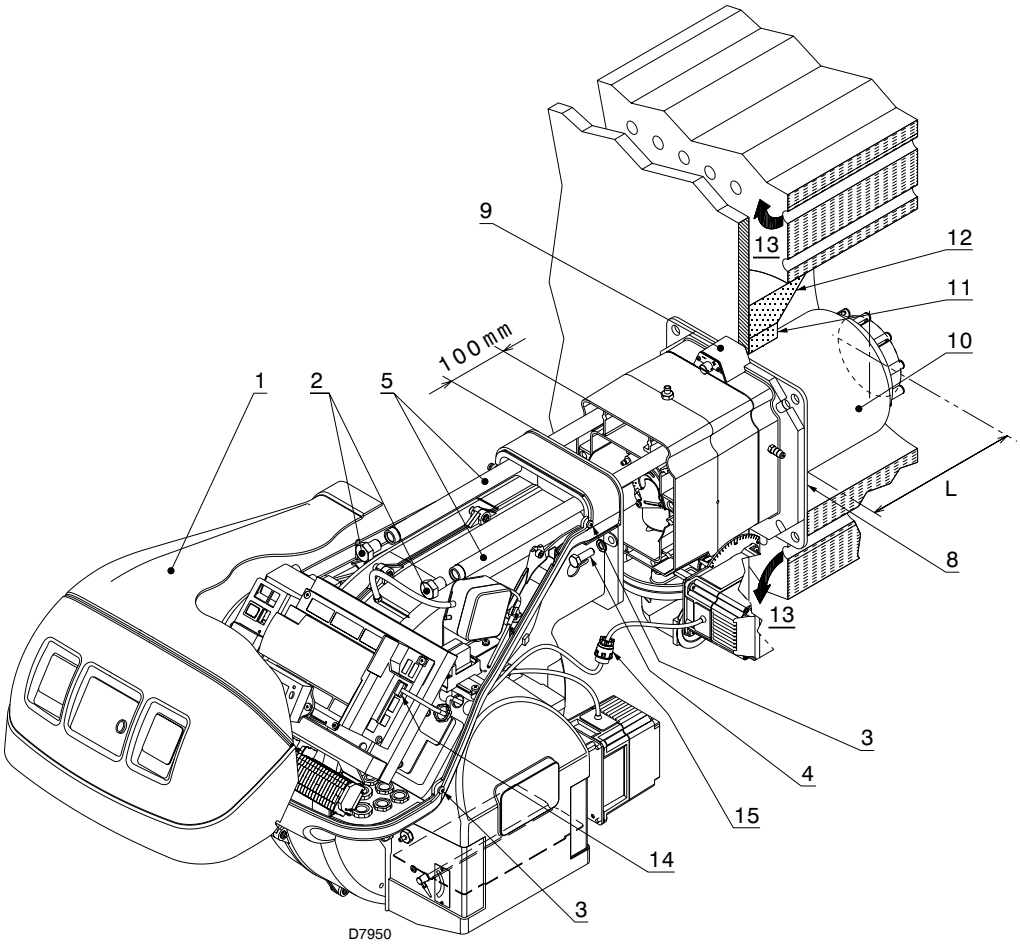

Fig. 14

5.7.1 Pre-calibrating the combustion head

Only for RS 120/EV BLU

Remove the 4 circular sectors 1)(Fig. 15) fixed behind the stability disc, removing the 8 screws 2).

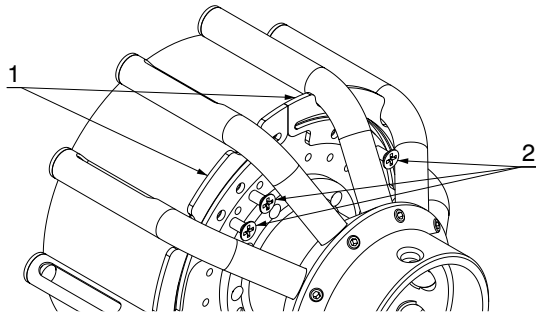

5.8 Combustion head adjustment

At this point of the installation, the combustion head is fixed to the boiler as shown in Fig. 13.
It is therefore especially easy to adjust, and this adjustment depends only on the maximum output of the burner.

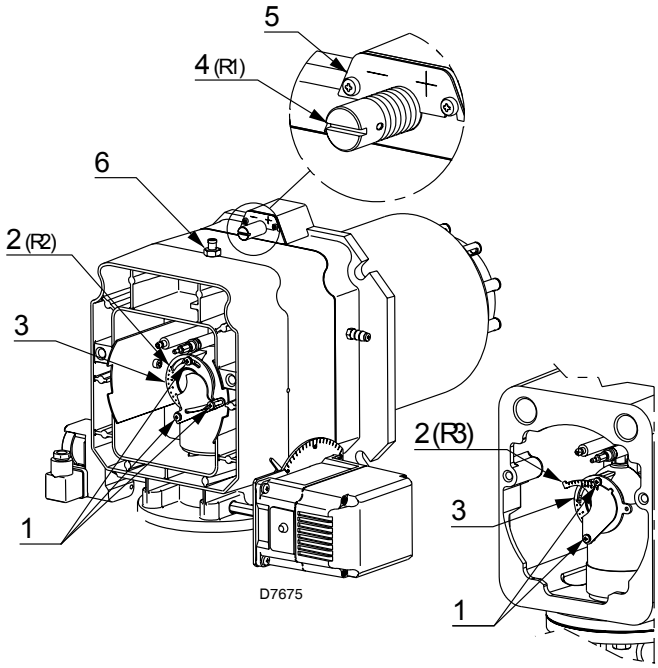

Fig. 16

Two adjustments of the head are foreseen:
- ➤ the R1 external air
- ➤ the R2 central gas/air (only RS 68-120-160/EV BLU)
- ➤ the R3 central air (only RS 200/EV BLU)

In the diagram of Fig. 17, find the notch at which both air and central gas/air should be adjusted.

Adjusting R1 external air

Rotate the screw 4) until the notch you have found corresponds with the front surface 5) of the flange.

To facilitate adjustment, loosen the screw 6), adjust and then lock.

Adjusting R2 central gas/air (RS 68-120-160/EV BLU)

Loosen the 3 screws 1) and rotate the ring nut 2) until the notch you have found corresponds with the index 3). Block the 3 screws 1).

Adjusting R3 central air (RS 200/EV BLU)

Loosen the 2 screws 1) and rotate the ring nut 2) until the notch you have found corresponds with the screw 1). Block the 2 screws 1).
The RS 200/EV BLU burner leaves the factory with the ring nut 3) calibrated to notch 0. Do not modify this value.

Example RS 68/EV BLU

Burner output = 500 kW
The diagram of Fig.17 shows that the adjustments for this potential are:
- air: R1 = notch 6
- central gas/air: R2 = notch 2

NOTE:
The diagram indicates the optimum adjustment for a type of boiler according to Fig. 4.
The adjustments indicated can be modified during the initial start-up.

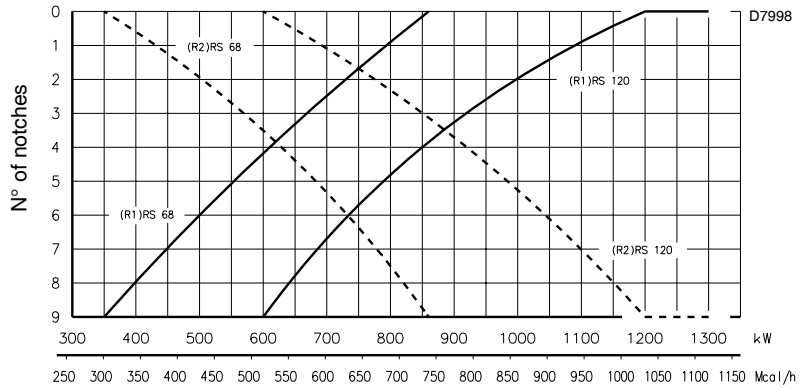

Max. burner output

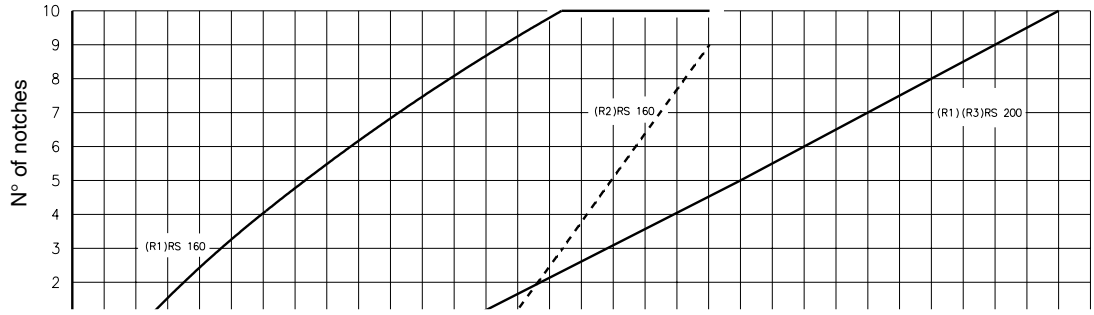

Once the combustion head adjustment is completed:

- ➤ reassemble the burner on the slide bars 3)(Fig. 14), about 100 mm from the pipe coupling 4);
- ➤ insert the probe and electrode cables, then slide the burner as far as the pipe coupling - burner in the position shown in Fig. 18;
- ➤ connect the servomotor plug 14)(Fig. 14) and tighten the cable grommet 15);
- ➤ connect the socket of the maximum gas pressure switch;
- ➤ refit the screws 2) on the slide bars 3);
- ➤ fix the burner to the pipe coupling with the screws 1).

WARNING

When fitting the burner on the two slide bars, it is advisable to gently draw out the high voltage cable and the flame detection probe cable until they are slightly stretched.

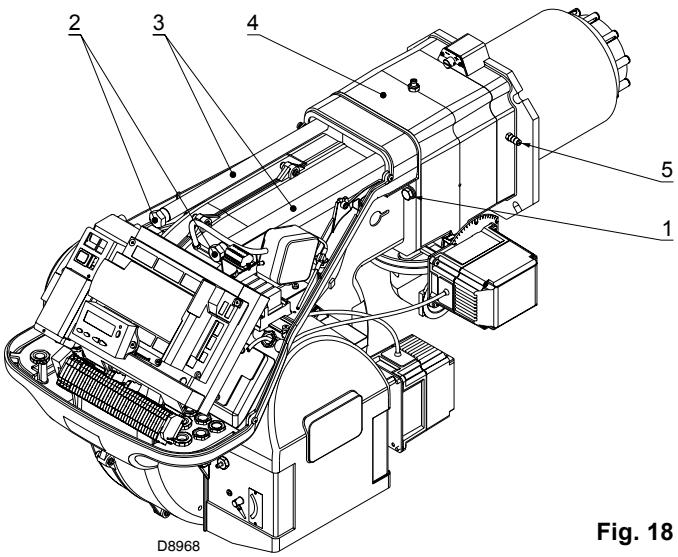

Fig. 18

5.9 Gas feeding

5.9.1 Gas train

Type-approved in accordance with EN 676 and supplied separately from the burner, with the code indicated in Tab. A.

The train can enter the burner from the right or left side, depending on which is the most convenient, see Fig. 19.

The gas train must be connected to the gas connection 1)(Fig. 19), using the flange 2), gasket 3) and screws 4) supplied with the burner.

The gas solenoids must be as close as possible to the burner to ensure that the gas reaches the combustion head within the safety time of 3s.

Ensure that the maximum pressure necessary for the burner is included in the calibration range of the pressure adjuster (colour of the spring): gas train MBC-1900-SE.

WARNING

See the accompanying instructions for the adjustment of the gas train.

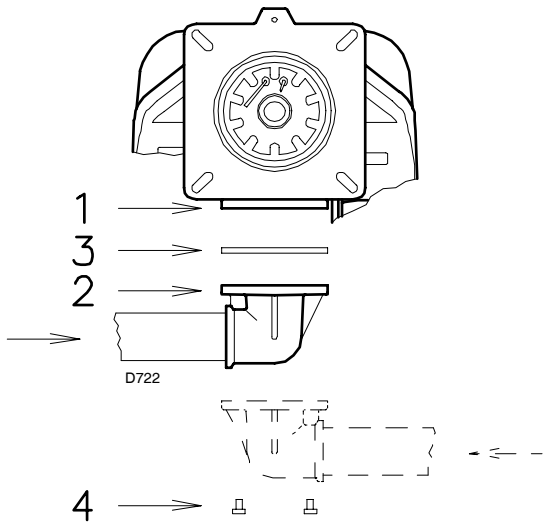

Fig. 19

Gas train			Gas train coupling on burner				Gas train - burner adapter
Code	Model	Ø	RS 68/EV	RS 120/EV	RS 160/EV	RS 200/EV	Code
3970256	Multibloc MB DLE 412 S52	1”1/4	•	•			3010126
3970250	Multibloc MB DLE 415 S52	1”1/2	•	•	•	•	3000843
3970257	Multibloc MB DLE 420 S52	2”	•	•	•	•	-
3970221	MBC-1200-SE -50	2”	•	•	•	•	-
3970222	MBC-1900-SE-65 FC	DN 65	•	•	•	•	3000825
3970223	MBC-3100-SE-80 FC	DN 80			•	•	3000826

Tab. A

5.9.2 Gas pressure

Tab. B indicates the minimum pressure drops along the gas supply line, depending on the maximum burner output.

Model	kW	1 Δp (mbar)		2 Δp (mbar)		3 Δp (mbar)											
						MB DLE 412		MB DLE 415		MB DLE 420		MBC 1200		MBC 1900		MBC 3100	
		G20	G25	G20	G25	G20	G25	G20	G25	G20	G25	G20	G25	G20	G25	G20	G25
RS 68/EV BLU	350	2.0		0.1		11.3		6.1		4.3		3.6		3.3		-	-
	400	3.0		0.1		14.1		7.4		5.2		3.8		3.4		-	-
	450	3.9		0.1		17.0		8.8		6.1		4.0		3.5		-	-
	500	5.0		0.2		19.9		10.1		7.0		4.2		3.6		-	-
	550	5.8		0.2		23.2		11.6		8.2		4.4		3.7		-	-
	600	6.8		0.2		26.7		13.2		9.5		4.6		3.9		-	-
	650	7.7		0.3		30.3		14.7		10.8		4.9		4.1		-	-
	700	8.6		0.3		34.0		16.4		12.1		5.1		4.2		-	-
	750	9.7		0.4		37.7		18.0		13.4		5.4		4.4		-	-
	800	10.6		0.4		41.5		19.9		14.8		5.8		4.6		-	-
	860	11.7		0.5		46.1		22.2		16.5		6.3		4.9		-	-
RS 120/EV BLU	600	4.4		0.3		26.7		13.2		9.5		4.6		3.9		-	-
	650	6.0		0.3		30.3		14.7		10.8		4.9		4.1		-	-
	715	7.9		0.4		35.1		16.9		12.5		5.2		4.3		-	-
	760	9.2		0.4		38.4		18.3		13.7		5.5		4.5		-	-
	825	10.8		0.5		43.4		20.9		15.5		6.0		4.7		-	-
	890	12.4		0.6		48.3		23.4		17.4		6.5		5.0		-	-
	955	14.0		0.6		53.6		26.0		19.3		7.1		5.3		-	-
	1020	15.5		0.7		60.4		28.5		21.2		7.6		5.6		-	-
	1090	17.2		0.8		67.6		31.5		23.5		8.3		6.0		-	-
	1170	18.7		1.0		76.0		34.8		26.2		9.1		6.5		-	-
	1250	21.0		1.1		-		38.2		28.9		9.9		6.9		-	-
	1300	22.5		1.2		-		40.5		30.9		10.6		7.3		-	-
RS 160/EV BLU	930	5.6		1.0		25.0		18.6		8.2		5.2		3.9		-	-
	1000	6.4		1.1		27.7		20.6		8.9		5.5		4.0		-	-
	1100	7.5		1.3		31.9		23.9		10.2		6.1		4.3		-	-
	1200	8.6		1.6		36.1		27.2		11.6		6.7		4.6		-	-
	1300	9.7		1.9		40.5		30.9		13.1		7.3		4.9		-	-
	1400	10.8		2.2		45.9		35.2		15.0		8.1		5.2		-	-
	1500	11.9		2.5		51.2		39.6		17.0		8.9		5.5		-	-
	1600	13.0		2.8		56.5		43.9		19.0		9.8		5.8		-	-
	1700	14.6		3.2		61.8		48.3		21.0		10.7		6.1		-	-
	1800	16.5		3.6		67.2		52.7		23.1		11.5		6.5		-	-
	1860	17.7		3.8		70.4		55.3		24.3		12.1		6.7		-	-
RS 200/EV BLU	1383	9.0	13.0	3.1	4.4	-	-	44.5	60.7	34.1	47.8	11.7	16.5	7.9	10.5	5.1	6.1
	1400	9.3	13.3	3.2	4.5	-	-	45.9	62.4	35.2	48.7	12.1	16.9	8.2	10.8	5.2	6.2
	1500	10.7	15.3	3.7	5.2	-	-	51.2	68.9	39.6	54.1	13.6	18.7	9.0	11.8	5.5	6.6
	1600	12.0	17.2	4.2	5.9	-	-	56.5	75.4	43.9	-	15.2	20.7	9.8	13.0	5.8	7.0
	1700	13.3	19.1	4.7	6.6	-	-	61.8	-	48.3	-	16.7	23.0	10.7	14.3	6.1	7.6
	1800	14.7	21.1	5.3	7.4	-	-	67.2	-	52.7	-	18.2	25.3	11.5	15.8	6.4	8.2
	1900	16.0	23.0	5.9	8.3	-	-	72.5	-	57.0	-	19.8	27.6	12.4	17.2	6.9	8.8
	2000	18.2	25.7	6.5	9.2	-	-	-	-	62.2	-	21.6	29.9	13.5	18.7	7.3	9.3
	2100	20.3	28.4	7.2	10.1	-	-	-	-	-	-	23.5	32.3	14.6	20.1	7.7	10.0
	2235	22.5	32.0	7.9	11.4	-	-	-	-	-	-	25.4	37.0	15.8	22.2	8.2	10.9
	2300	24.9	33.2	8.6	12.1	-	-	-	-	-	-	27.3	39.2	17.0	23.2	8.7	11.4
	2400	28.0	35.0	9.4	13.2	-	-	-	-	-	-	29.1	42.7	18.1	24.8	9.2	12.1

Tab. B

The values shown in Tab. B refer to: Column 1

Column 2
Pressure loss at gas butterfly valve 2)(Fig. 20) with maximum opening: 90°.

Column 3
Pressure loss of gas train 3)(Fig. 20) includes:
- adjustment valve (VR)
- safety valve (VS) (both with maximum opening)
- pressure adjuster (R)
- filter (F)

Calculate the approximate maximum output of the burner in this way:
– subtract the combustion chamber pressure from the gas pressure measured at test point 1)(Fig. 20).
– find, in the table relating to the burner concerned, the pressure value closest to the result of the subtraction.
– read the corresponding output on the left.

Example for RS 200/EV BLU with G20 natural gas:
Maximum output operation

Gas pressure at test point 1)(Fig. 20) =	19 mbar
Pressure in combustion chamber =	3 mbar
19 - 3 =	16 mbar

A pressure of 16 mbar (column 1) corresponds in the table to an output of 1900 kW. This value serves as a rough guide; the effective output must be measured at the gas meter.

To calculate the required gas pressure at test point 1)(Fig. 20), set the MAX output required from the burner operation:
– find the nearest output value in the table for the burner in question
– read, on the right (column 1), the pressure at the test point 1) (Fig. 20).
– add this value to the estimated pressure in the combustion chamber.

Example for RS 200/EV BLU with G20 natural gas:
Required burner maximum output operation: 1900 kW

Gas pressure at an output of 1900 kW =	16 mbar
Pressure in combustion chamber =	3 mbar
16 + 3 =	19 mbar

pressure required at test point 1)(Fig. 20).

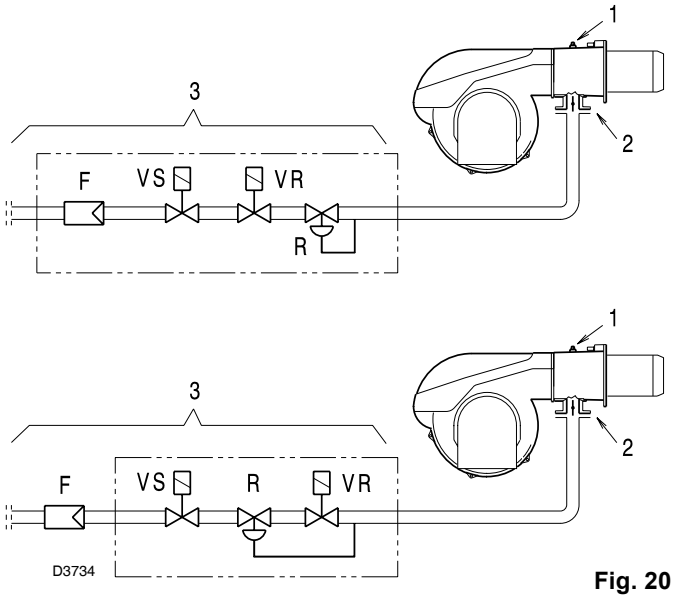

Fig. 20

5.9.3 Gas feeding line

1 - Gas input pipe
2 - Manual valve
3 - Vibration damping joint
4 - Pressure gauge with pushbutton cock
5 - Filter
6A - "Threaded" multibloc including:
- filter (can be replaced)
- safety valve
- working valve
- pressure adjuster

6B - "Flanged" multibloc including:
- safety valve
- working valve
- pressure adjuster

7 - Minimum gas pressure switch
8 - Valve leak detection control device. In compliance with the EN 676 standard, gas valve leak detection control devices are compulsory for burners with maximum outputs over 1200 kW.
9 - Gasket
10 - Gasket supplied with burner
11 - Gas adjustment butterfly valve
12 - Maximum gas pressure switch
13 - Gas train/burner adaptor
- supplied with burner
- supplied upon request separately from the gas train for the flanged versions

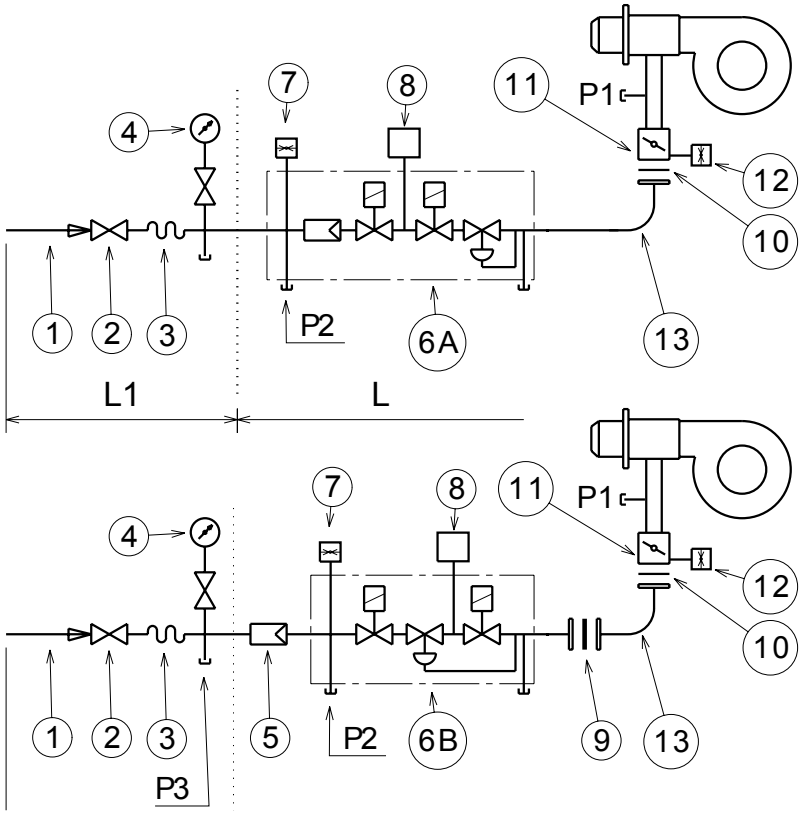

5.10 Electrical connections

DANGER

- The electrical wiring must be carried out with the electrical supply disconnected.
- Electrical wiring must be made in accordance with the regulations currently in force in the country of destination and by qualified personnel. Refer to the wiring diagrams.
- RIELLO declines all responsibility for modifications or connections different from those shown in the wiring diagrams.
- Check that the electrical supply of the burner corresponds to that shown on the identification label and in this manual.
- Do not invert the neutral with the phase in the electrical supply line. Any inversion would cause a lockout due to firing failure
- The burners have been approved for intermittent operation. This means they should compulsorily be stopped at least once every 24 hours to enable the control box to perform checks of its own start-up efficiency. Normally, burner stopping is guaranteed by the boiler's thermostat/pressure switch.
- If this is not the case, a time switch should be fitted in series to IN to stop the burner at least once every 24 hours. Refer to the wiring diagrams.
- The electrical safety of the device is obtained only when it is correctly connected to an efficient earthing system, made according to current standards. It is necessary to check this fundamental safety requirement. In the event of doubt, have the electrical system checked by qualified personnel. Do not use the gas tubes as an earthing system for electrical devices.
- The electrical system must be suitable for the maximum power absorption of the device, as indicated on the label and in the manual, checking in particular that the section of the cables is suitable for that level of power absorption.
- For the main power supply of the device from the electricity mains:
  - do not use adapters, multiple sockets or extensions;
  - use a omnipolar switch with an opening of at least 3 mm between the contacts (overvoltage category), as foreseen by the current safety standards.
- Do not touch the device with wet or damp body parts and/or in bare feet.
- Do not pull the electric cables.

Before carrying out any maintenance, cleaning or checking operations:

DANGER

Disconnect the electrical supply from the burner by means of the main system switch.

DANGER

Close the fuel interception tap.

If the hood is still present, remove it and proceed with the electrical wiring according to the wiring diagrams.

Use flexible cables in compliance with the EN 60 335-1 standard.

All the cables to be connected to the burner should be passed through cable grommets, as shown in Fig. 22.

The use of the cable grommets can take various forms. By way of example we indicate the following mode:

1 single-phase power supply
2 available
3 consent/safety
4 minimum gas pressure switch
5 gas valves
6 signal cable input from the inverter.

Cable grommets used in the factory:

A rpm sensor
B maximum gas pressure switch
C gas servomotor
D air servomotor

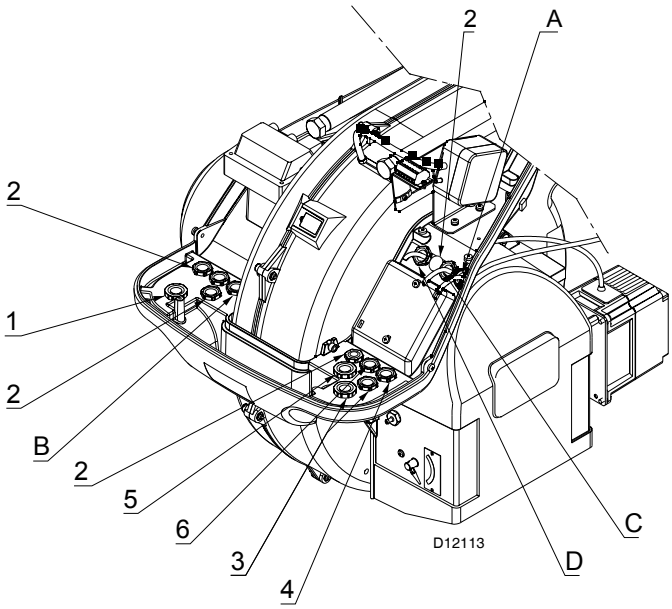

Fig. 22

After carrying out maintenance, cleaning or checking operations, reassemble the hood and all the safety and protection devices of the burner.

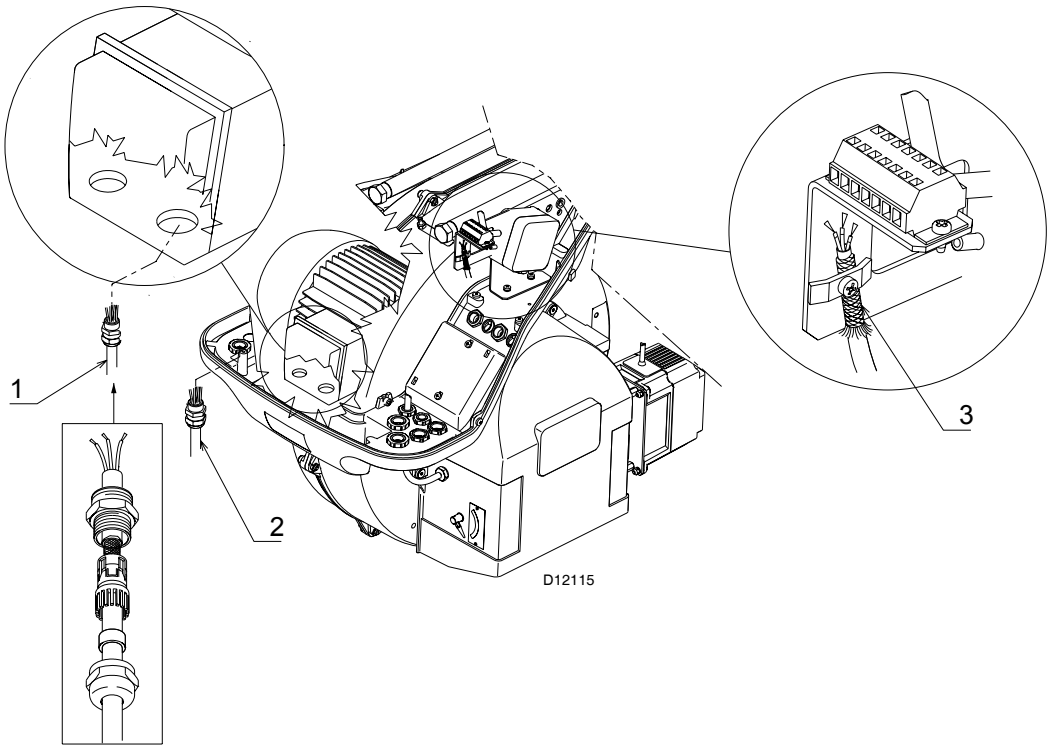

Fig. 23

WARNING

It is important to shield the motor cable 1) as indicated in Fig. 23.

Key (Fig. 23)

1 Power supply cable (from the inverter).
2 Single-phase power supply cable.
3 Connecting cable between the inverter and the REC 37... electronic cam

WARNING

The connection from the inverter to the REC 37... electronic cam, must be performed as indicated in Fig. 23 pos. 3.

5.10.1 Rpm sensor adjustment

WARNING

The distance between the rpm sensor 1) (Fig. 24) and the disc 2) (2 mm) must be observed!

WARNING

It is important that the disc 2) is installed on the burner as indicated in Fig. 25.

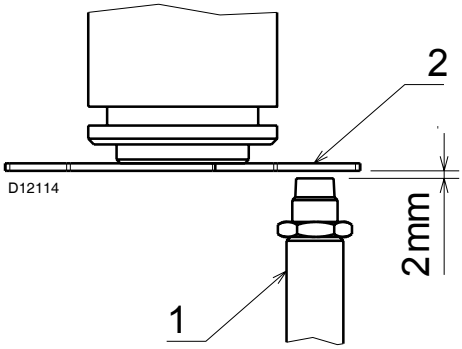

Fig. 24

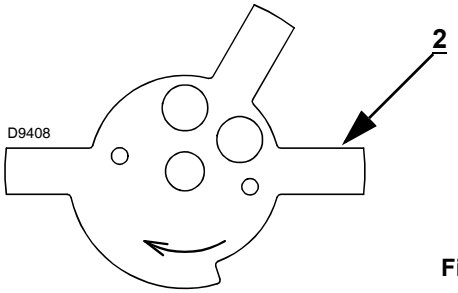

Fig. 25

6 Start-up, calibration and operation of the burner

6.1 Notes on safety for the first start-up

WARNING

- The first start-up of the burner must be carried out by qualified personnel, as indicated in this manual and in compliance with the standards and regulations of the laws in force.
- Check the correct working of the adjustment, command and safety devices.

6.2 Operations before start-up

- Ensure that the gas supply company has carried out the supply line vent operations, eliminating air or inert gases from the piping.
- Slowly open the manual valves situated upstream from the gas train.
- Adjust the minimum gas pressure switch to the start of the scale.
- Adjust the maximum gas pressure switch to the end of the scale.
- Adjust the air pressure switch to the start of the scale.
- Adjust the pressure switch for the valve leak detection control device (PVP kit), if present, according to the instructions supplied with the kit itself.

Check the gas supply pressure by connecting a pressure gauge to the pressure test point 1)(Fig. 26) of the minimum gas pressure switch: it must be lower than the maximum allowed pressure of the gas train, as shown on the characteristics label.

DANGER

An excessive gas pressure can damage the components of the gas train and lead to a risk of explosion.

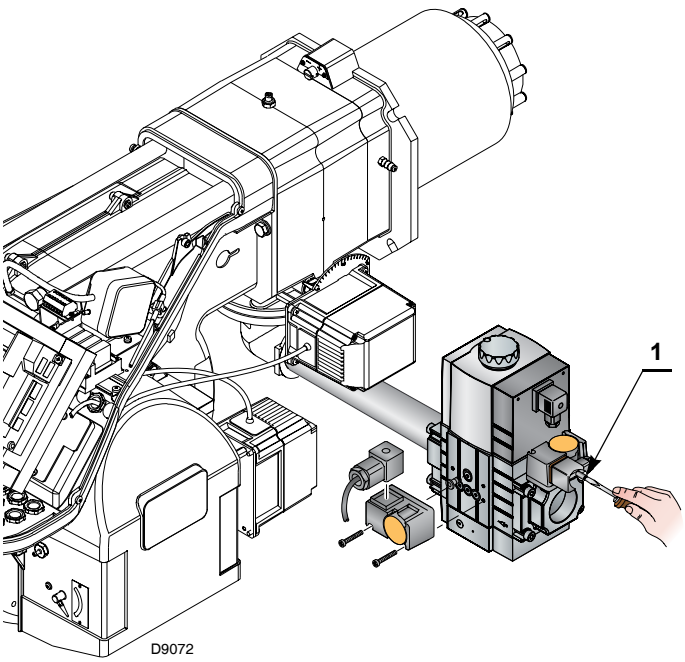

Bleed the air from the piping of the gas train, connecting a plastic tube to the pressure test point 1)(Fig. 26) of the minimum gas pressure switch.
Take the vent tube outside the building so you can notice the smell of gas.

Connect two lamps or testers to the two gas line solenoids to check the exact moment in which voltage is supplied.
This operation is unnecessary if each of the two solenoids is equipped with a pilot light that signals voltage passing through.

WARNING

Before starting up the burner, it is good practice to adjust the gas train so that ignition takes place in conditions of maximum safety, i.e. with gas delivery at the minimum.

6.3 Burner start-up

Feed electricity to the burner via the disconnecting switch on the boiler panel.

Close the thermostats/pressure switches and turn the switch of Fig. 27 to position "**1**".

DANGER

Make sure that the lights or testers connected to the solenoids, or the pilot lights on the solenoids themselves, indicate that no voltage is present.

If voltage is present, stop the burner **immediately** and check the electrical wiring.

Follow the **"Start-up procedure"** on page 35.

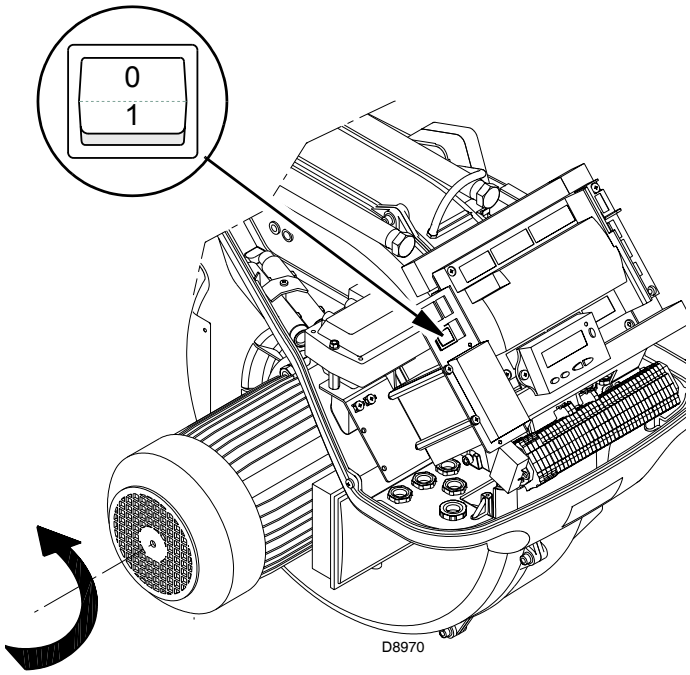

Fig. 27

6.4 Final calibration of the pressure switches

6.4.1 Air pressure switch

Adjust the air pressure switch after performing all other burner adjustments with the air pressure switch set to the start of the scale (Fig. 28).

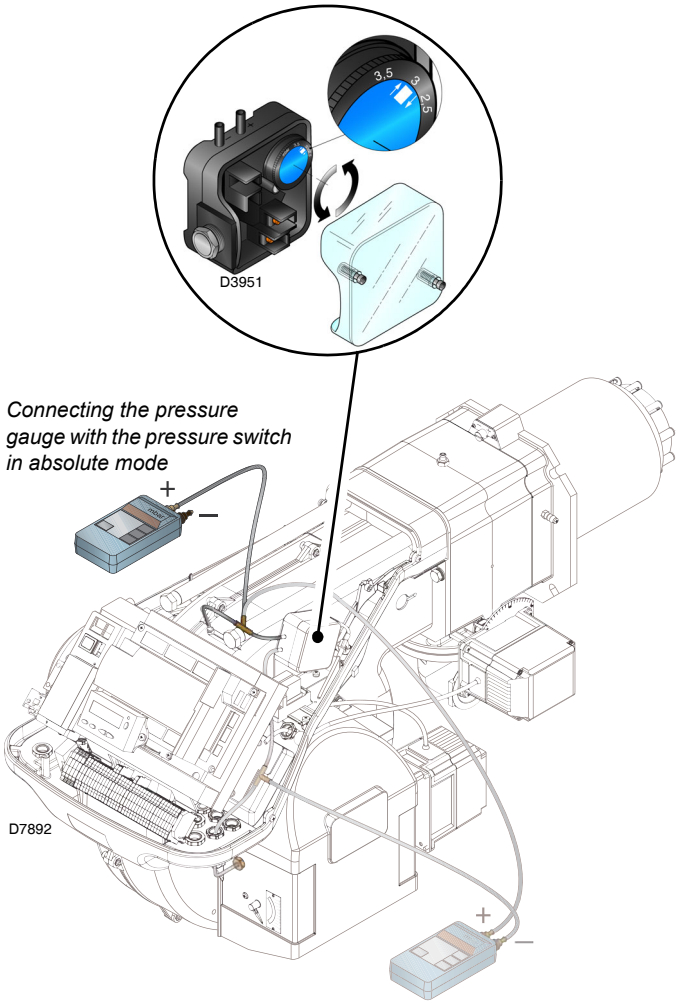

Fig. 28

With the burner working at MIN output, insert a combustion analyser in the stack, slowly close the suction inlet of the fan (for example, with a piece of cardboard) until the CO value does not exceed 100 ppm.

Slowly turn the appropriate knob clockwise until the burner goes into lockout.

Check the indication of the arrow pointing upwards on the graduated scale.
Turn the knob clockwise again, until the value shown on the graduated scale corresponds with the arrow pointing downwards, and so recovering the hysteresis of the pressure switch (shown by the white mark on a blue background, between the two arrows). Now check the correct start-up of the burner.

If the burner locks out again, turn the knob slightly anticlockwise.

The standard configuration is that with the air pressure switch connected in absolute mode. Note the presence of a “T” connection, not supplied.

In certain applications in strong depression situations, the connection of the pressure switch does not allow it to change over.
In this case it is necessary to connect the pressure switch in differential mode, applying a second tube between the air pressure switch and the fan suction line mouth.
In this case, the pressure gauge must also be connected in differential mode.

6.4.2 Maximum gas pressure switch

Adjust the maximum gas pressure switch (Fig. 29) after performing all other burner adjustments with the maximum gas pressure switch set to the end of the scale.
With the burner operating at maximum output, lower the adjustment pressure by slowly turning the relative knob anticlockwise until the burner locks out.
Now turn the knob clockwise by 2 mbar and repeat the start-up of the burner.
If the burner locks out again, turn the knob clockwise again by 1 mbar.

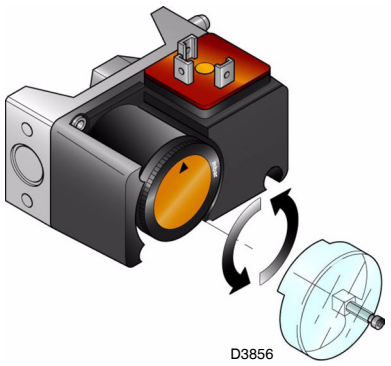

Fig. 29

6.4.3 Minimum gas pressure switch

Adjust the minimum gas pressure switch (Fig. 30) after performing all the other burner adjustments with the pressure switch set to the start of the scale.
With the burner operating at maximum output, increase adjustment pressure by slowly turning the relative knob clockwise until the burner stops.
Now turn the knob anticlockwise by 2 mbar and repeat burner start-up to ensure it is uniform.
If the burner locks out again, turn the knob anticlockwise again by 1 mbar.

6.4.4 PVP pressure switch kit

Adjust the pressure switch for the valve leak detection control device (PVP kit) (Fig. 31) according to the instructions supplied with the kit itself.

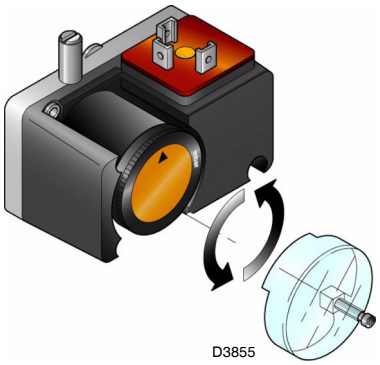

Fig. 31

6.5 Operator panel operation

The REC37.400A2 control box is directly connected to the operator panel. The buttons allow you to programme the operation and diagnostics menus.

The burner management system is visualised on the LCD display. To simplify the diagnostics, the display shows the operating status, type of problem, and when the problem arose.

WARNING

- ➤ Observe the procedures and adjustments shown below.
- ➤ All interventions (assembly and installation operations, assistance, etc.) must be carried out by qualified personnel.
- ➤ If the display and operator panel are dirty, clean them with a dry cloth.
- ➤ Protect the panel from excessive temperatures and liquids.

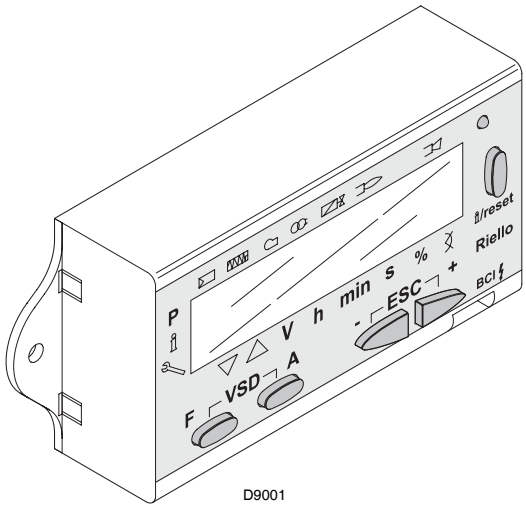

Fig. 32

6.5.1 Description of the symbols on the display

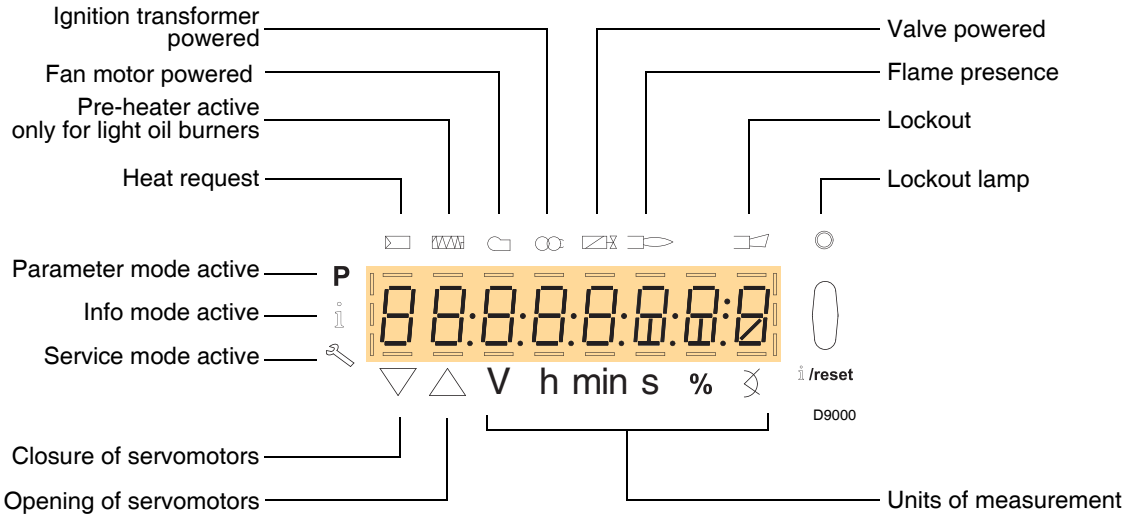

Fig. 33

6.5.2 Description of the buttons

Button	Function
F	- **F** key Fuel servomotor adjustment (keep F pressed and adjust the value by pressing - or +)
A	- **A** key Air servomotor adjustment (keep A pressed and adjust the value by pressing - or +)
VSD F A	- **A** and **F** keys: VSD function Modifying setting parameters in active parameter mode **P** (simultaneously press F and A plus - or +)
i /reset D8918	- **Enter** Parameter mode - **Reset** in the event of a lockout - Access to a lower level of the menu - In Service mode and Info mode, allows: * the selection of the parameter (flashing symbol) (press the key for <1s) * access to a lower level of the menu (press the key for 1 - 3s) * access to a higher level of the menu (press the key for 3 - 8s) * access to another mode (press the key for > 8s)
-	- Reduction of value - Access to a lower point of the modulation curve - Scrolling of the parameter list
+	- Increase of value - Access to a higher point of the modulation curve - Scrolling of the parameter list
ESC - +	**Quit function (ESC)** (press - and + simultaneously) - Does not confirm the value - Access to a higher level of the menu

6.5.3 Visualisation and programming mode

6.5.3.1 Normal mode

The **Normal mode** is the standard operation mode visualised on the operator panel display. It is the main level of the menu.

➤ Visualises the operation conditions and allows you to modify the operation point of the burner manually.
➤ It does not require any use of the keys of the operator panel.
➤ It allows access to the other visualisation and programming modes.

From Normal mode you can access other levels:

- Info mode (**InFo**)
- Service mode (**SEr**)
- Parameter mode (**PArA**)

Some examples in the standard conditions are given below.

The burner is in the heat request waiting mode, or the selector “0-1” of Fig. 27 is on the “0” position.

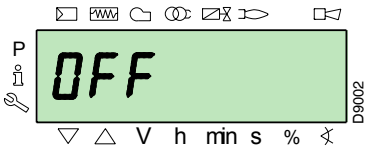

The display visualises the various phases of the start-up, ignition and switch-off of the burner.
In the example, the display indicates that the burner is in phase 30 (see the diagram of Fig. 34), and there are 12s until the next phase.

The burner is working in the requested load position (in the example alongside, **78.4%**).

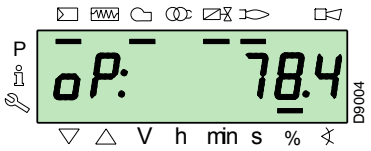

The display visualises alternately the error code (in the example alongside, **c: 12**) and the relative diagnostic (in the example **d: 0**).
The system goes into safety mode and the message shown in the next figure appears.

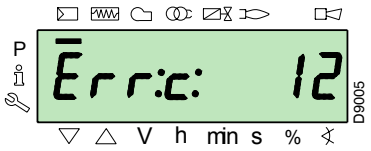

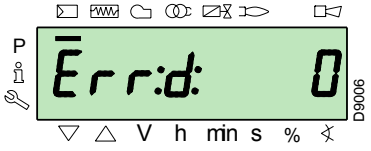

The burner goes into lockout.
The display visualises alternately the lockout code (in the example alongside **c: 4**) and the relative diagnostic (in the example **d: 3**). The red lockout lamp is on.

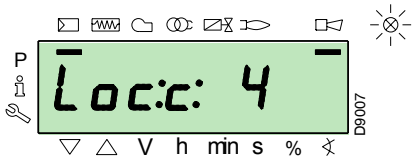

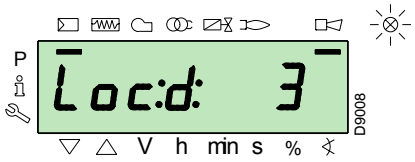

The display visualises alternately an error code and a diagnostic, which does not take the system into safety mode.

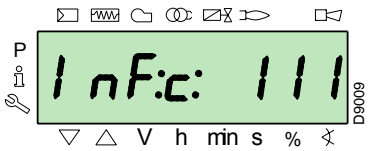

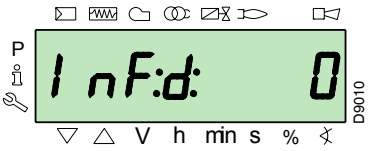

6.5.4 Reset procedure

The burner is in lockout when the red indicator light on the operator panel is lit up, and the display visualises the lockout code (in the example alongside **c: 4**) and the relative diagnostics (in the example **d: 3**) alternately.

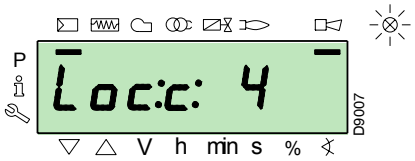

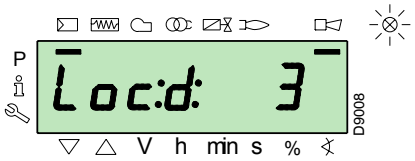

To reset, press the **"i/reset"** key for 1s: the display will show **"rESEt"**. When the key is released, the lockout signal will disappear and the red indicator light will switch off.
The control box is reset.

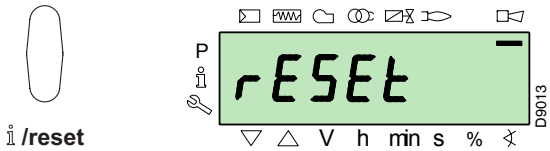

6.5.5 Manual lockout procedure

If necessary, it is possible to manually block the control box and, consequently, the burner, by pressing the key **"i/reset"** simultaneously with any other key of the operator panel.

With the switch "**1-0**" in Fig. 27, the burner does not stop immediately, but the switch-off phase is activated.

6.5.6 Manual operation procedure

After the adjustment of the burner and the setting of the points on the modulation curve, it is possible to manually check the operation of the burner along the entire curve.

Example:

The burner is working at the requested load percentage: 20%.

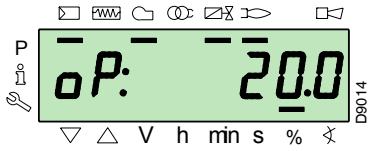

Press the **"F"** key for 1 second: **"LoAd"** is displayed and the load percentage flashes.

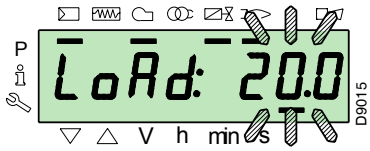

Releasing the **"F"** key, the standard visualisation appears, with the current load percentage flashing: this means that the burner is working in Manual mode (any outside adjustment is excluded and only the safety devices are active).

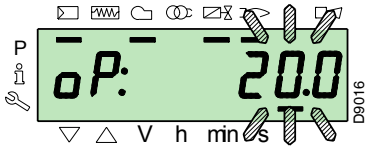

Keep the **"F"** key pressed and, with the keys **"+"** or **"–"**, increase or decrease the load percentage.

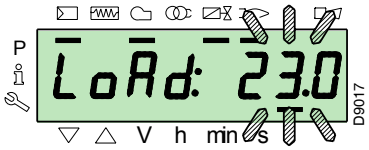

To exit manual mode, press the keys "**+**" and "**-**" (**ESC**) simultaneously for 3 seconds: the burner will work in Automatic mode and the output will depend on the thermostat/adjustment pressure switch (TR).

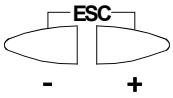

6.5.6.1 Info mode

The **Info mode** (**InFo**) visualises general system information.

To access this level you must:

➤ press the "**i/reset**" key for 1-3 s.

➤ Release the key immediately when the display shows **"InFo"**.

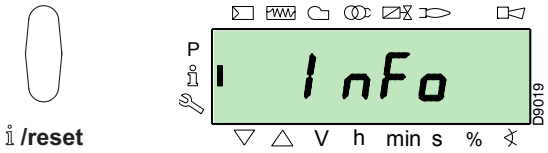

The list of parameters (in the sequence in which they are visualised) is provided in the table below.

167	Volumetric delivery of fuel in the unit of measurement selected
162	Operation time with flame
163	Operation time
164	No. of resettable ignitions
166	Total no. of ignitions
113	Identification code of the burner
107	Software version
108	Software variation
102	Control box test date
103	Identification code of the control box
104	Identification number of the group of parameters set
105	Version of the group of parameters
143	Reserved
End	

6.5.6.2 Service mode

The **Service mode** (**SEr**) visualises the error log and certain technical information about the system.

To access this level you must:

➤ press the **"i/reset"** key for more than 3 s

➤ release the key immediately when the display shows **"SEr"**.

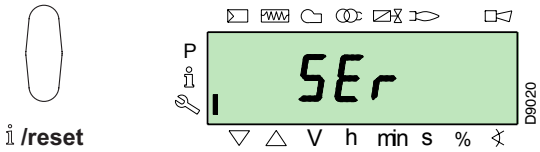

The list of parameters (in the sequence in which they are visualised) is provided in the table below.

954	Flame intensity (%)
960	Actual fuel which passes in units of volume / h (m^3/h, l/h, ft^3/h, gal/h)
121	Manual setting of output Not defined = automatic operation
922	Position of the servomotors (expressed in degrees, symbol ∡) 0 = fuel 1 = air
161	Number of errors
701 - 725	Log of the errors: 701-725.01, Code

Operating procedure in Info and Service modes

After access to these levels, the display visualises the number of the parameter (flashing) on the left, and the corresponding value on the right.

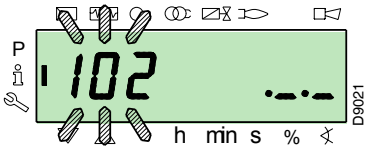

If the value is not visualised, press the **"i/reset"** key for 1 - 3s.

To return to the Parameter List, press the **"i/reset"** key for more than 3s, or press the keys **"+"** and **"-"** (**ESC**) simultaneously.

To move on to the next parameter, press the **"+"** or **"i/reset"** key for less than 1 s. At the end of the list, the display visualises **"End"**.

To move back to the previous parameter, press the key **"-"**.

To return to the Normal/Standard visualisation mode, press the **"i/reset"** key for more than 3s, or press the keys **"+"** and **"-"** (**ESC**) simultaneously.

For a moment the display will show **"OPErAte"**.

6.5.6.3 Parameter mode

The **Parameter mode** (**PArA**) visualises (and allows you to modify/programme) the list of parameters shown in the table of page 38. The factory-set parameters are not visible.

To access this level, refer to "**Access procedure with password**".

6.5.7 Access procedure with password

Press the **"F"** and **"A"** keys simultaneously for 1s.

For a moment the display will show **"CodE"**, and immediately after you will see 7 dashes, the first one flashing.

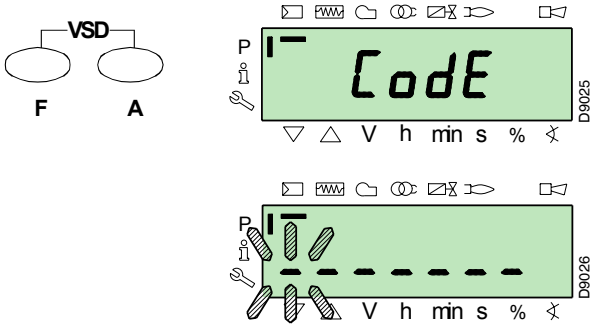

With the keys **"+"** and **"–"** select the first character of the password (letter or number), and confirm by pressing the key **"i/reset"**.

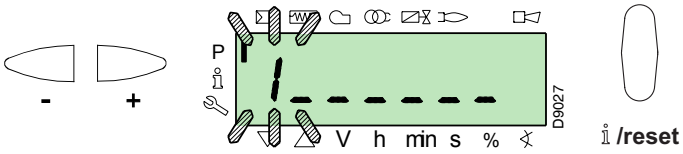

Once you have confirmed, the sign **"–"** will appear.

Continue in the same way for the other characters.

After inserting the last character of the password, confirm by pressing the key **"i/reset"**: if the password inserted is correct you will see **"PArA"** for a few seconds, then you can access the various groups of parameters.

With the keys "**+**" and "**–**" select the group you require.

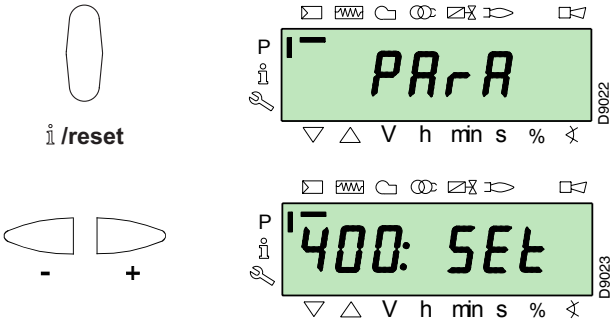

If the password inserted is incorrect, the message **"Error"** will appear for a moment. It is then necessary to repeat the procedure.

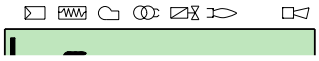

The password must only be communicated to the qualified personnel or the Technical Assistance Service, and must be kept in a safe place.

Once the access procedure has been carried out, the display will show **"PArA"** for a few seconds.

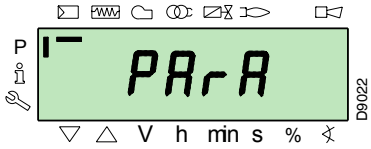

Select the group of parameters with keys **"+"** and **"-"**, and confirm by pressing the **"i/reset"** key.

Within the group you have chosen, scroll through the list with the keys **"+"** and **"-"**. At the end of the list, the display visualises **"End"**.

To return to Normal visualisation mode, simultaneously press the keys **"+"** and **"-"** (**ESC**) twice.

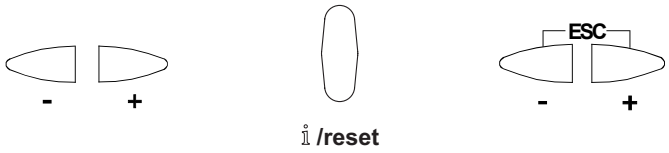

The parameter level is subdivided into groups.

100: ParA	**General parameters** Information and identification data of the system.
200: ParA	**Checks on the burner** Type of operation, intervention and safety times of the various phases.
400: Set	**Air/fuel modulation curve** Setting of air/fuel adjustment points
500: ParA	**Positioning of servomotors** Choice of positions of the air/fuel servomotors in the various phases.
600: ParA	**Servomotors** Setting and addressing of the servomotors.
700: HISt	**Log of the errors** Choice of different visualisation modes for the errors log.
900: dAtA	**Process information** Visualisation of information for the remote management of the burner.

All the parameters are checked in the factory. Modification/tampering may compromise the good operation of the burner and cause injury to people or damage to things. In any case, modifications must be carried out by qualified personnel.

To modify a parameter, refer to the "**Parameter modification procedure**".

6.5.8 Parameter modification procedure

After accessing the level and group of parameters, the display visualises the number of the parameter (flashing) on the left, and the corresponding value on the right.

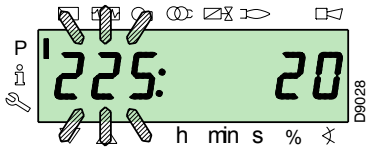

If the value is not visualised, press the key **"i/reset"** for 1 - 3s.
An example of how to modify the parameter relating to **pre-purging time** (no.225) is given below.
Press the key **"i/reset"**: the value **20** (seconds) will appear.

NOTE:
The unit of measurement of the time is not visualised but is understood in seconds.

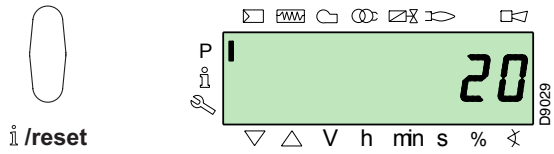

Press the key **"+"** and increase the value to **25** seconds (flashing). Press the key **"i/reset"** to confirm and store.

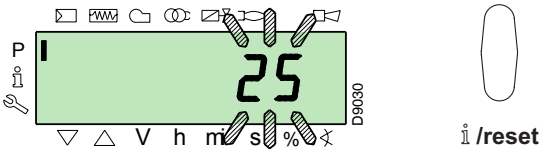

To return to the list of parameters, press the keys **"+"** and **"-"** (**ESC**) simultaneously.

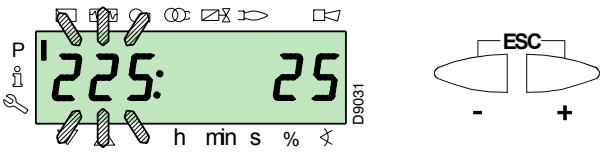

6.5.9 Procedure for inserting and adjusting points on the modulation curve

Nine adjustment/calibration points (P1 ÷ P9) can be inserted in the control box for each servomotor, varying their position by degrees and, consequently, the quantity of air and fuel introduced.

The **ignition point P0** is independent of the minimum modulation value. This means that, in the event of difficulty, it is possible to switch on the burner at a value other than the modulation minimum (**P1**).

To access the **Parameter mode** (group 400) referring to the **"Access procedure with password"** on page 31.

To insert or adjust a point, proceed as follows.

Using the keys **"+"** and **"-"** insert/select the curve point you want and wait for it to flash: this means that the servomotors are now positioned on the values shown on the display and which correspond to the point previously set.

It is now possible to insert/modify the position by degrees.

The set value does not require confirmation.

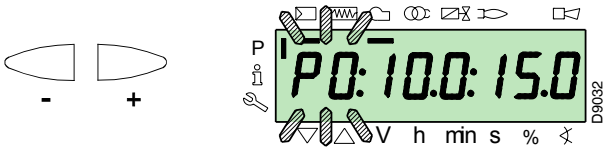

For the fuel servomotor, keep the key **"F"** pressed (the position in degrees flashes) and press the keys **"+"** or **"-"** to increase or decrease the value.

For the air servomotor, keep the key **"A"** pressed (the position in degrees flashes) and press the keys **"+"** or **"-"** to increase or decrease the value.

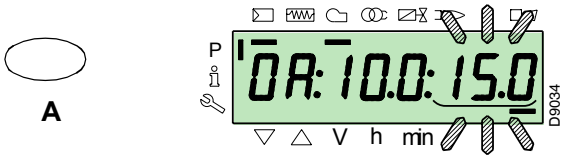

To adjust the speed of the inverter (expressed in **%** and that is **50 Hz = 100 %**), keep the buttons **"F"** and **"A"** simultaneously pressed, the percentage position blinks and press buttons **"+"** or **"-"** to increase or decrease the value.

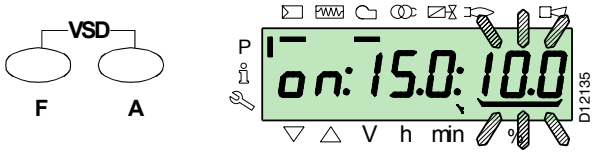

Select another point, or exit this area by pressing the keys **"+"** and **"-"** (**ESC**) simultaneously.

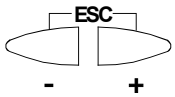

6.5.10 Backup/Restore

Using the RDI 21… display screen it is possible to memorise the parameters and the details present in the control box and refresh them retrospectively.

6.5.11 Backup

To perform the backup, proceed as follows:

Access the Parameters Level referring to “Access procedure with password” on pag. 30. **“Access procedure with password”** on page 31

The display screen displays the parameters group **400**.

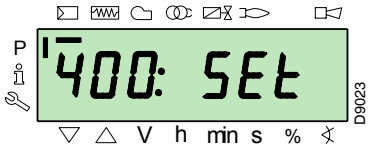

With the key **"-"**:

Select the parameters group **000**:

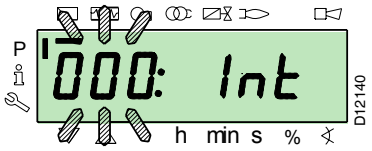

The **000** parameter blinks, confirm using the **"i/reset"** key:

i /reset

The display screen shows parameter **050** blinking:

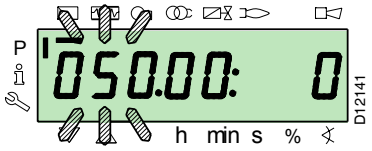

Confirm with the key **"i/reset"**:

i /reset

The parameter **bAC_UP** appears on the display screen:

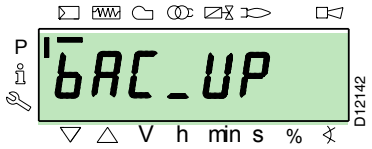

confirm with the key **"i/reset"**:

The display screen shows the following value:

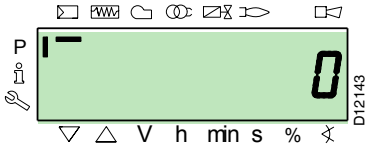

Use the button **"+"**:

The value will be set to **1**. The value 1 is blinking:

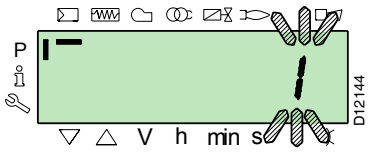

confirm with the button **"i/reset"** to activate the **backup** process.

i /reset

The value **1** appears on the display screen:

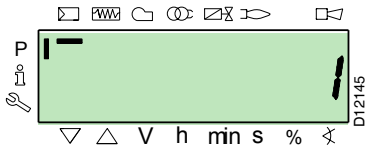

After approx 5 seconds (it depends on the duration of the programme), the 0 value appears on the display screen, this is to indicate that the backup process has been completed correctly.

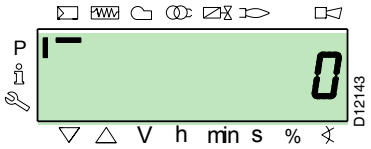

NOTE:

If an error occurs during the backup process, the display screen shows a negative value.

Refer to diagnostic code 137 to determine the cause of the error. (See errors list).

WARNING

It is advisable to perform a backup every time that a parameter is changed!

6.5.12 Restore

To perform a restore procedure, proceed as follows:

Access the Parameters Level referring to **“Access procedure with password”** on page 31.

The display screen displays the parameters group **400**.

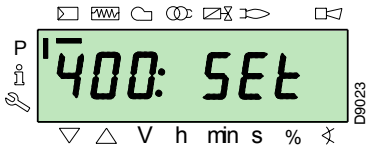

With the key **"-"**:

Select the parameters group **000**:

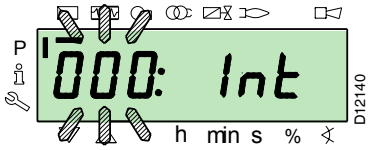

The **000** parameter blinks, confirm using the **"i/reset"** key:

The display screen shows parameter **050** blinking:

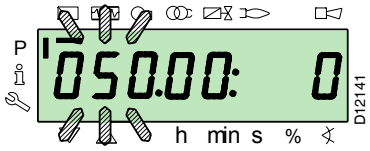

Confirm with the key **"i/reset"**:

The parameter **bAC_UP** appears on the display screen:

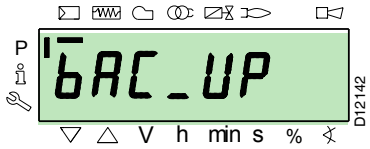

With the key **"+"**

select the **rEStorE** parameter

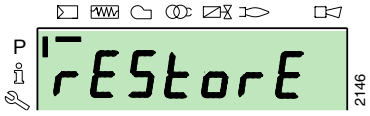

confirm with the key **"i/reset"**:

The display screen shows the following value:

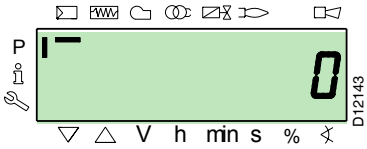

Use the button **"+"**:

The value will be set to **1**. The value 1 is blinking:

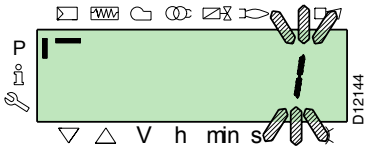

confirm with the button **"i/reset"** to activate the **restore** process.

The value **1** appears on the display screen:

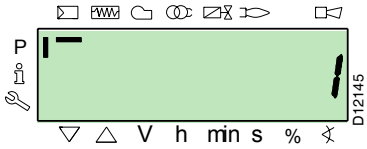

After approx 8 seconds (it depends on the duration of the programme), the **0** value appears on the display screen, this is to indicate that the restore process has been completed correctly.

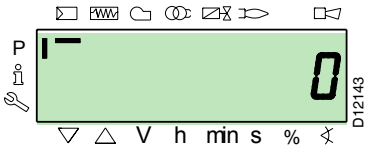

NOTE:
Prior to the data restore, the control box compares the identification code of the burner and the (ASN) number contained within it with the identification code of the burner and the (ASN) number within the RDI21... display. If the data are in agreement, the restore process takes place . If the data are discordant, however, the restore process is aborted. In the event that it is aborted, or if an error occurs during the restoration process, the display screen shows a negative value. For the errors diagnostic, refer to diagnostic code 137 (see "List of error codes" on page 47). When the restore process is successfully completed, the 0 value is shown on the display screen. The control box REC37… is provided without a burner identification. In this case, the restore process via the RDI21 display… is possible without having to insert the burner identification from inside it.
Err C information: 136 D: 1 (restore process initialised) is displayed for a brief moment.

WARNING

At the end of the restore process, it is necessary to check the sequence of functions and the list of parameters.

6.5.13 Start-up procedure

Check that the operator panel display shows the heat request and **"OFF Upr"**: this means it is necessary to set the modulation curve of the burner.

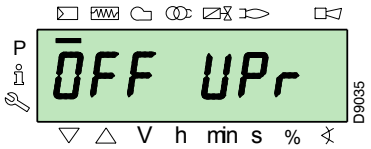

Access the Parameter level by referring to the **"Access procedure with password"** on page 31.
The display visualises the parameter group **400**; confirm with the "i/reset" key.

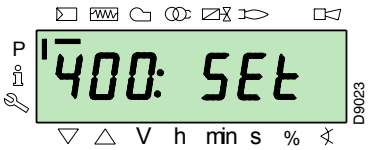

Using the **"+"** key select the parameters group **600**:

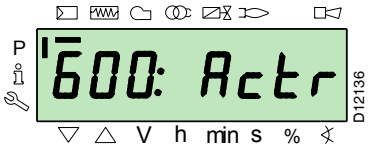

Confirm with the key **"i/reset"**:

i /reset

scroll through the parameters with the key **"+"**

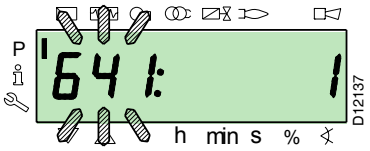

Set parameter **641 = 1**.
Press the **"info"** key, begin the "VSD speed standardisation" phase.

WARNING

See the specific manual for the correct inverter parameterization.

The air servometer opens the damper at 90° and simultaneously begins the inverter start phase when the speed/frequency max is reached.

Phase 22:
Start of the fan motor.

As the burner is not fitted with a device to check the sequence of the phases, the motor rotation may be incorrect. As soon as the burner starts up, go in front of the cooling fan of the fan motor and check it is rotating anticlockwise.
See Fig. 27.
If this is not the case:
- ➤ place the switch of Fig. 27 in position **"0"** and wait for the control box to carry out the switch-off phase;
- ➤ disconnect the burner from the electrical supply;
- ➤ Invert the phases on the three-phase power supply of the inverter (See the specific inverter manual.

DANGER

This operation must be carried out with the electrical supply disconnected.

If the operation is successful, the parameter is reset to **0**.

Negative values indicate errors.

Phase 24:
The burner goes to the pre-purging position, the air servomotor opens the damper at 90°.

Phases 80, 81, 82, 83:
These phases relate to the valve seal test.

Phase 30:
The count of the pre-purging time pre-set in the factory begins.

Phase 36:
The burner goes to its switch-on position, point "**P0**", defined in Tab. C on page 36: the display shows a flashing "**P0**" indication. If the value proposed is suitable, confirm. Otherwise, modify the ignition point (see the **"Procedure for inserting and adjusting points on the modulation curve" on page 32**).
Confirm with the key "+".

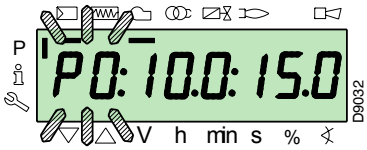

+

Phase 38:
The ignition phase begins and the spark goes off.

Phase 40:
The gas valves open (the count of the safety time begins). Check the presence of the flame from the special inspection window, and the correctness of the combustion parameters; if necessary, vary the degrees of opening/closing of the air and fuel servomotors and VSD.
If the control box goes into lockout, press the keys **"+"** and **"-"** (esc) simultaneously: the display visualises alternately the lockout code for flame absence **c: 4**) and the relative diagnostic (**d: 3**).

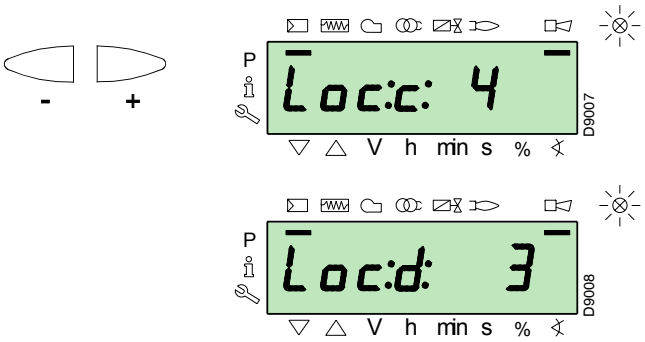

Resolve the problem, referring to the paragraph **"Ignition failure"** on page 45.
To release, see the **"Reset procedure"** on page 29.
The display visualises **"OFF Upr"**.
Repeat the start-up procedure.

The values previously inserted remain stored.

When ignition has occurred (point **"P0"**), proceed with the calibration of the modulation curve starting from the minimum point **"P1"**.

Press the **"+"** key: the display visualises the flashing "**P1**" indication and proposes the same settings as for point **"P0"**.

It is possible to modify this value and obtain a modulation minimum different from the ignition point.

After adjusting point "**P1**", press the "**+**" key: the display shows "**CALC**" for a few seconds. The control box will automatically calculate the points from "**P2**" to "**P8**", distributing them in a straight line, assuming for point "**P9**" the factory setting (see the table below). These are theoretical and must be checked.

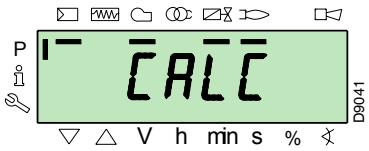

Press the **"+"** key to check if the settings of point "**P2**" are suitable. If not, modify the point. Proceed in sequence as far as point "**P9**".

Before moving on from one point to the next, wait for the servomotors to reach the position visualised on the display.

During the adjustment of each point, work on the air and gas ser-

If this is not the case, work also on the gas valve stabiliser: in this case however, it is necessary to revise the calibrations of all the points previously set.

Once you have arrived at point "**P9**", if the maximum output is not as you wish, work on the gas valve stabiliser: in this case however, it is necessary to revise the calibrations of all the points previously set.

At this point, confirm by pressing the "**+**" and **"-"** (**ESC**) keys simultaneously: parameter **"546"** appears.

If you want the burner to work on the entire modulation curve, press the **"+"** and **"-"** (**ESC**) keys simultaneously: in this way, the parameter **"546"** will automatically be assigned the value of 100% and the parameter **"545"** will have a value of 20%.

If you want to make the burner work on just a part of the modulation curve, modify parameters **"546"** and **"545"** according to the **"Parameter modification procedure"** on page 32.

Press simultaneously the keys **"+"** and **"-"** (**ESC**) twice: the display will visualise the current load position.

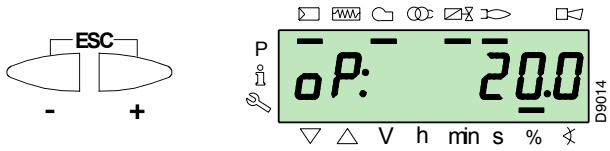

Factory settings

Point of the curve		Burner			
		RS68/EV	RS120/EV	RS160/EV	RS200/EV
P0	air	15°	15°	15°	15°
	gas	15°	15°	15°	15°
	VSD	100°	100°	100°	100°
P9	air	90°	90°	90°	90°
	gas	90°	90°	90°	90°
	VSD	100°	100°	100°	100°

Tab. C

6.5.14 CALC function

The diagram of Fig. 34 shows how the fuel modulation curve is modified if the values of point "**P5**" are changed.
By keeping the **"+"** key pressed for more than 3s, the points from "**P6**" to "**P8**" are recalculated.
By keeping the **"-"** key pressed for more than 3s, the points from "**P4**" to "**P2**" are recalculated.

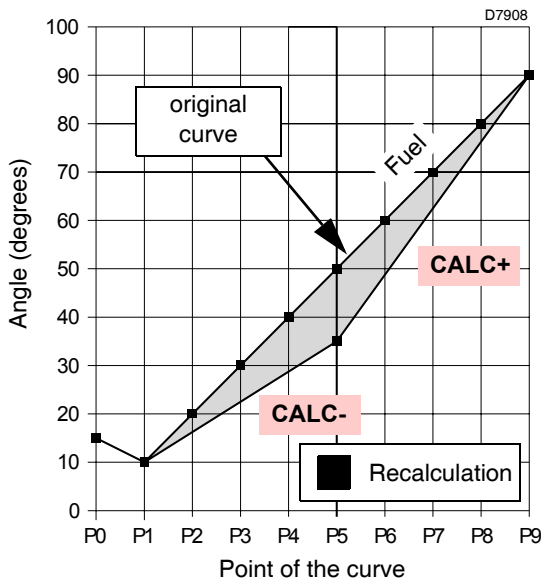

Fig. 34

The diagram of Fig. 35 shows the fuel modulation curve when, after the modification of point "**P5**", the recalculation of all the other points is not carried out.

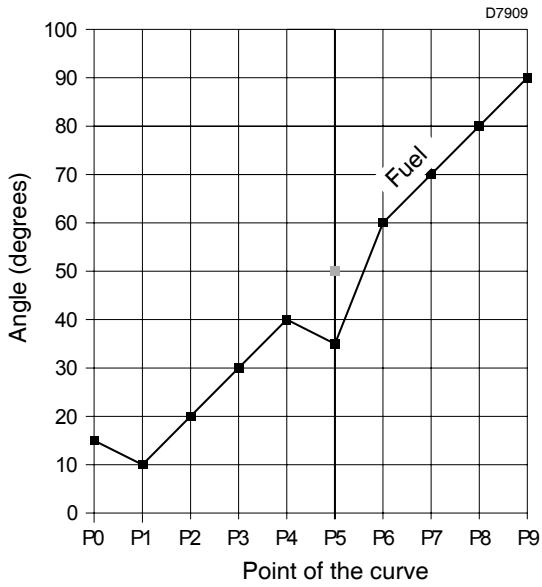

Fig. 35

6.5.15 Modify acceleration - deceleration train

The burner leaves the factory with the parameters 522 (acceleration) and 523 (deceleration) already set.

If the operator needs to modify them, proceed as follows:

Access the Parameters Level referring to **"Access procedure with password"** on page 31.

With the key **"+"**

Select the parameters group **500**:

With the key **"+"**

Select the parameter **522 (acceleration)**:

Press the "info" key to change parameter 522.

The set value must be **greater than** at least 20% of the PI120 parameter of the SED2 inverter.

Example: 522 at 12s ----> PI120 of the SED2 at 10s.

522 at 10s ----> PI120 of the SED2 at 8s.

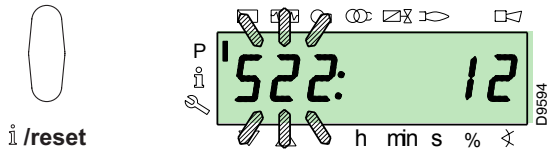

With the key **"+"**

Select the parameter **523 (deceleration)**:

Press the **"info"** key to change parameter **523**.

The set value must be **greater than** at least 20% of the PI121 parameter of the SED2 inverter.

Example: 523 at 12s ----> PI121 of the SED2 at 10s.

523 at 10s ----> PI121 of the SED2 at 8s.

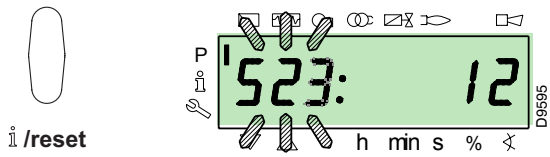

6.5.16 List of parameters

Parameter		Number of elements	Unit of measurement	Modification	Values interval		Degree of precision	Predefined setting	Access mode
Par. no.	Description				Min.	Max.			
000	**Internal parameters**								
050	Start backup/restore process via RDI21... / PC TOOL (set the parameter to 1) Index 0 = create backup Index 1 = perform restore The negative values are errors (see error code 137)	2	-	Modification	-99	2	1	0; 0	Service Mode
055	Burner identification number created from the backup on RDI21...	1	-	Reading only	0	99999999	1	0	Service Mode
056	ASN number created by the backup on RDI21...	8	-	Reading only	0	127	1	0	Service Mode
057	Software Version created by the backup on RDI21...	1	-	Reading only	0x100	0xFFF9	1	0	Service Mode
100	**General parameters**								
102	Control box identification date	1	-	Reading only	0	255	1		Info mode
103	Control box identification number	1	-	Reading only	0	65535	1		Info mode
104	Identification number of the group of parameters set	1	-	Reading only	0	255	1	30	Info mode
105	Version of the group of parameters set	1	-	Reading only	0	0xFFFF	1	V01.03	Info mode
107	Software version	1	-	Reading only	0	0xFFF9	1	V03.30	Info mode
108	Software variation	1	-	Reading only	0	225	1	1	Info mode
111	ASN number to verify the ASN number created by the backup on RDI 21…	8	-	Reading only	0	127	1	0	Parameters mode
113	Burner identification	1	-	Modification	0	99999999	1	Not defined	Info Mode with Parameters Mode Password
121	Manual setting of output Not defined = automatic operation	1	%	Modification / zero setting	0%	100%	0.1%	Not defined	Info mode
123	Minimum output step position Index 0: BACS output Index 1: output of the external load regulator, analogue. Index 2: output of the external load regulator contacts.	3	%	Modify/set to zero	0%	100%	0.1%	0% ; 1%; 0%	Parameters mode
124	Beginning flame loss test (TÜV test) (define the parameter at 1) (switch of flame loss fuel valves) A negative value indicates an error (see code 150)	1	-	Modification	-6	1	1	0	Parameters mode
125	Frequency of main power supply 0 = 50 Hz 1 = 60 Hz	1	-	Modification	0	1	1	0	Service mode
126	Brightness of display	1	%	Modification	0%	100%	1%	75%	Parameter mode
128	Fuel meter: Led pulse valence (led pulses / volumetric flow units)	1	-	Modification	0	400	0.01	0	Service mode
130	Eliminate visualisation error chronology To eliminate the visualisation, set the parameter to 1, then to 2 Answer 0: Process successful Answer -1: Time-out of 1_2 - Sequence	1	-	Modification	-5	2	1	0	Service mode
141	Remote management of control box 0 = off 1 = modbus 2 = reserved	1	-	Modification	0	2	1	0	Parameter mode
	Standby time before a new attempt in event of communication fault								Parameter

Parameter		Number of elements	Unit of measurement	Modification	Values interval		Degree of precision	Predefined setting	Access mode
Par. no.	Description				Min.	Max.			
145	Peripheral address for Modbus	1	-	Modification	1	247	1	1	Parameter mode
146	Baud Rate for Modbus 0 = 9600 1 = 19200	1	-	Modification	0	1	1	1	Parameter mode
147	Parity for Modbus 0 = none 1 = odd 2 = even	1	-	Modification	0	2	1	0	Service mode
148	Selection of the burner operation during the interruption of the switch-over with the system of remote management. 0 = burner switched off With **modulating operation** the settings of the values are the following: 0...19.9 = burner switched off 20...100 = 20...100% burner modulation range (20% = low flame) These settings adapt to parameters 545 (modulation minimum) and 546 (modulation maximum) With **stage operation**: 0 = burner switched off, 1st, 2nd, 3rd stage according to the values assigned to P1, P2, P3 No setting = no function in the event of communication interruption	1	%	Modification / zero setting	0%	100%	0.1%	Not defined	Parameter mode
161	Total number of errors	1	-	Reading only	0	65535	1	0	Info mode
162	Hours of operation (that can be reset)	1	h	Reset	0h	999999h	1h	0h	Info mode
163	Total hours of power supply to control box	1	h	Reading only	0h	999999h	1h	0h	Info mode
164	Total number of start-ups (that can be reset)	1	-	Reset	0	999999	1	0	Info mode
166	Total number of start-ups	1	-	Reading only	0	999999	1	0	Info mode
167	Volumetric delivery of fuel in the selected unit of measurement (that can be reset)	1	m^3, l, ft^3, gal	Reset	0	99999999	1	0	Info mode
200	**Checks on the burner**								
201	Burner operation mode (fuel supply line, modulating/stage, servomotors, etc.) -- = not defined (eliminate curves) 1 = Gmod 2 = Gp1 mod 3 = Gp2 mod 4 = Lo mod 5 = Lo 2 stages 6 = Lo 3 stages 7 = Gmod pneu 8 = Gp1 mod pneu 9 = Gp2 mod pneu	1	-	Modification / zero setting	1	9	1	Not defined	Parameter mode

Parameter		Number of elements	Unit of measurement	Modification	Values interval		Degree of precision	Predefined setting	Access mode
Par. no.	Description				Min.	Max.			
201	Burner operation mode (fuel supply line, modulating/stage, servomotors, etc.) -- = not defined (eliminate curves) 1 = Gmod 2 = Gp1 mod 3 = Gp2 mod 4 = Lo mod 5 = Lo 2 stage 6 = Lo 3 stage 7 = Gmod pneu 8 = Gp1 mod pneu 9 = Gp2 mod pneu 10 = LoGp mod 11 = LoGp 2-stage 12 = Lo mod 2 fuel valves 13 = LoGp mod 2 fuel valves 14 = G mod pneu without actuator 15 = Gp1 mod pneu without actuator 16 = Gp2 mod pneu without actuator 17 = Lo 2-stage without actuator 18 = Lo 3-stage without actuator 19 = G mod only gas actuator 20 = Gp1 mod only gas actuator 21 = Gp2 mod only gas actuator 22 = Lo mod only oil actuator	1	-	Modify/set to zero	1	22	1	Not defined	Parameters mode
208	Stopping of the program 0 = deactivated 1 = pre-purging (Ph24) 2 = Ignition (Ph36) 3 = Interval 1 (Ph44) 4 = Interval 2 (Ph52)	1	-	Modification	0	4	1	0	Parameter mode
210	Alarm as the pre-purging phase begins; 0 = Deactivated; 1 = Activated	1	-	Modification	0	1	1	0	Parameter mode
211	Uphill train fan motor	1	s	Modification	2s	60s	0.2s	2s	Parameter mode
212	Maximum time to reach low flame	1	s	Modification	0.2s	10 min	0.2s	45s	Parameter mode
215	Maximum repeats of safety circuit 1 = No repetition 2...15 = Number of repetitions 16 = Constant repetitions	1	-	Modification	1	16	1	16	Parameter mode
221	Gas: selection of flame sensor 0 = QRB.../ QRC 1 = ION / QRA	1	-	Modification	0	1	1	1	Parameter mode
222	Gas: Selection of the pre-purging function 0 = deactivated 1 = activated	1	-	Modification	0	1	1	1	Parameter mode
223	Maximum repeats of minimum gas pressure switch intervention 1 = No repetition 2...15 = Number of repetitions 16 = Constant repetitions	1	-	Modification	1	16	1	16	Parameter mode
225	Gas: pre-purging time	1	s	Modification	20s	60 min	0.2s	20s	Parameter mode
226	Gas: pre-ignition time	1	s	Modification	0.4 s	60 min	0.2s	2s	Parameter mode
230	Gas: interval 1	1	s	Modification	0.4 s	60s	0.2s	2s	Parameter mode
232	Gas: interval 2	1	s	Modification	0.2s	60s	0.2s	2s	Parameter mode
233	Gas: post-combustion time	1	s	Modification	0.2s	60s	0.2s	8s	Parameter mode
234	Gas: post-purging time (no extraneous light test)	1	s	Modification	0.2s	108 min	0.2s	0.2s	Parameter mode
	Gas: Minimum gas pressure switch input 0 = deactivated								

Parameter		Number of elements	Unit of measurement	Modification	Values interval		Degree of precision	Predefined setting	Access mode
Par. no.	Description				Min.	Max.			
237	Gas: Maximum gas pressure switch / POC Input 0 = deactivated 1 = Maximum gas pressure switch 2 = POC	1	-	Modification	1	2	1	1	Parameter mode
239	Gas: Intermittent operation 0 = deactivated 1 = activated	1	-	Modification	0	1	1	1	Parameters mode
241	Gas: Valve leak detection test 0 = test deactivated 1 = valve leak detection test at startup 2 = valve leak detection test at shutdown 3 = valve leak detection test at startup and at shutdown	1	-	Modification	0	3	1	2	Parameter mode
248	Gas: Post-purging time (t3) (at deactivation of the load (LR)) - ON	1	s	Modification	1s	108 min	0.2s	1s	Parameters mode
261	Oil: selection of flame sensor 0 = QRB.../ QRC... 1 = ION / QRA...	1	-	Modification	0	1	1	0	Parameter mode
265	Oil: pre-purging time	1	s	Modification	15s	60 min	0.2s	15s	Parameter mode
266	Oil: pre-ignition time	1	s	Modification	0.6s	60 min	0.2s	2s	Parameter mode
270	Oil: interval 1	1	s	Modification	0.4 s	60 min	0.2s	2s	Parameter mode
272	Oil: interval 2	1	s	Modification	0.4 s	60 min	0.2s	2s	Parameter mode
273	Oil: post-combustion time	1	s	Modification	0.2s	60s	0.2s	8s	Parameter mode
274	Oil: Post-purging time (no extraneous light test)	1	s	Modification	0.2s	108 min	0.2s	0.2s	Parameter mode
276	Oil: Minimum input oil pressure switch 0 = deactivated 1 = activated from phase 38 2 = activated from safety time (TSA)	1	-	Modification	1	2	1	1	Parameters mode
277	Oil: Maximum oil pressure switch / POC Input 0 = deactivated 1 = Maximum oil pressure switch 2 = POC	1	-	Modification	1	2	1	1	Parameters mode
279	Oil: Intermittent operation 0 = deactivated 1 = activated	1	-	Modification	0	1	1	1	Parameters mode
281	Oil: selection transformer ignition phase TA 0 = brief pre-ignition (Ph38) 1 = long pre-ignition (with fan) (Ph22)	1	-	Modification	0	1	1	1	Parameter mode
284	Oil: Post-purging time (t3) (at deactivation of the load (LR)) - ON	1	s	Modification	1s	108 min	0.2s	1s	Parameters mode
400	**Air/fuel modulation curve**								
401	Checking fuel servomotor	13	(°)	Modification	0°	90°	0.1°	0°; 0°; 15°; Not defined	Parameter mode
402	Checking air servomotor	13	(°)	Modification	0°	90°	0.1°	0°; 90°; 45°; Not defined	Parameter mode
403	VSD control curve ratio	13	%	Modification	20%	100%	0.1%	0%; 100%; 50%; Not defined	Parameter mode
500	**Positioning of servomotors**								
501	Position of the fuel servomotor in absence of flame Index 0 = standby position Index 1 = pre-purging position Index 2 = post-purging position	3	(°)	Modification	0°	90°	0.1°	0°; 0°; 15°	Parameter mode
	Position of the air servomotor in absence of flame Index 0 = standby position								Parameter

Parameter		Number of elements	Unit of measurement	Modification	Values interval		Degree of precision	Predefined setting	Access mode
Par. no.	Description				Min.	Max.			
503	VSD speed without flame Index 0 = standby speed Index 1 = pre-purging speed Index 2 = post-purging speed	3	%	Modification	0%	100%	0.1%	0%; 100%; 50%	Parameter mode
522	Acceleration	1	s	Modification	5 s	20s	1s	10s	Parameter mode
523	Deceleration	1	s	Modification	5 s	20s	1s	10s	Parameter mode
542	VSD/PWM activation 0 = Deactivated 1 = Activated	1	-	Modification	0	1	1	0	Parameter mode
545	Minimum modulation limit Not defined = 20%	1	%	Modification / zero setting	20%	100%	0.1%	Not defined	Parameter mode
546	Maximum modulation limit Not defined = 100%	1	%	Modification / zero setting	20%	100%	0.1%	Not defined	Parameter mode
600	**Servomotors**								
606	Tolerance limit for position check (0.1°) Index 0 = fuel Index 1 = air More serious position error, where a defect has certainly been detected - > Stop range: (P 606 - 0.6°) a P606	2	(°)	Modification	0.5°	4°	0.1°	1.7°; 1.7°	Parameter mode
641	VSD speed standardisation control Negative value error diagnostics (see error code 82) 0 = standardisation deactivated 1 = standardisation active	1	-	Modification	-25	1	1	0	Parameter mode
642	Standardised speed Index 0 = speed 1 Index 1 = speed 2	2	-	Reading only	650	6500	0.1	Not defined	Parameter mode
645	Analogue exit configuration 0 = DC 0...10 V 1 = DC 2...10 V 2 = DC 0 / 2...10 V	1	-	Modification	0	2	1	0	Parameter mode
700	**Log of the errors:**								
701	Error chronology: 701-725.01.Code	25	-	Reading only	0	255	1	0	Info mode
•	Error chronology: 701-725.02.Diagnostic code	25	-	Reading only	0	255	1	0	Info mode
•	Error chronology: 701-725.03.Error class	25	-	Reading only	0	6	1	0	Info mode
•	Error chronology: 701-725.04.Phase	25	-	Reading only	0	255	1	0	Info mode
•	Error chronology: 701-725.05.Start-up meter	25	-	Reading only	0	99999999	1	0	Info mode
725	Error chronology: 701-725.06.Load	25	%	Reading only	0%	100%	0.1%	0%	Info mode
900	**Process information**								
903	Actual output Index 0 = fuel Index 1 = air	2	%	Reading only	0%	100%	0.1%	0%	Info mode
922	Position of the servomotors Index 0 = fuel Index 1 = air	2	(°)	Reading only	-50°	150°	0.01°	0°	Info mode
935	Absolute speed	1	-	Reading only	0	6553.5	0.1	0	Parameter mode
936	Standardised speed	1	%	Reading only	-200%	200%	0.1%	0%	Info mode
	Heat source active 1 = output during the definition of the curves								

Parameter		Number of elements	Unit of measurement	Modification	Values interval		Degree of precision	Predefined setting	Access mode
Par. no.	Description				Min.	Max.			
947	Result of the sampling of the contact (codified in bits) Bit 0.0 = 1: Minimum pressure switch Bit 0.1 = 2: Maximum pressure switch Bit 0.2 = 4: Pressure switch control valves Bit 0.3 = 8: Air pressure switch Bit 0.4 = 16: Open load check Bit 0.5 = 32: ON load check Bit 0.6 = 64: Closed load check Bit 0.7 = 128: Safety circuit Bit 1.0 = 1: Safety valve Bit 1.1 = 2: Ignition Bit 1.2 = 4: Fuel valve 1 Bit 1.3 = 8: Fuel valve 2 Bit 1.4 = 16: Fuel valve 3/ pilot valve Bit 1.5 = 32: Reset	2	-	Reading only	0	255	1	0	Info mode
950	Relay request status (coded in bits) Bit 0 = 1: Alarm Bit 1 = 2: Safety valve Bit 2 = 4: Ignition Bit 3 = 8: Fuel valve 1 Bit 4 = 16: Fuel valve 2 Bit 5 = 32: Fuel valve 3/ pilot valve	1	-	Reading only	0	255	1	0	Info mode
954	Flame intensity	1	%	Reading only	0%	100%	1%	0%	Info mode
960	Actual output	1	m^3/h, l, h, ft^3/h, gal/h	Reading only	0	6553.5	0.1	0	Info mode
961	Status of external modules and visualisation	1	-	Reading only	0	255	1	0	Info mode
981	Memory error: Code	1	-	Reading only	0	255	1	0	Info mode
982	Memory error: diagnostic code	1	-	Reading only	0	255	1	0	Info mode
992	Error indicators	10	-	Reset	0	0xFFFFFFFF	1	0	Parameter mode

6.6 Operation sequence of the burner

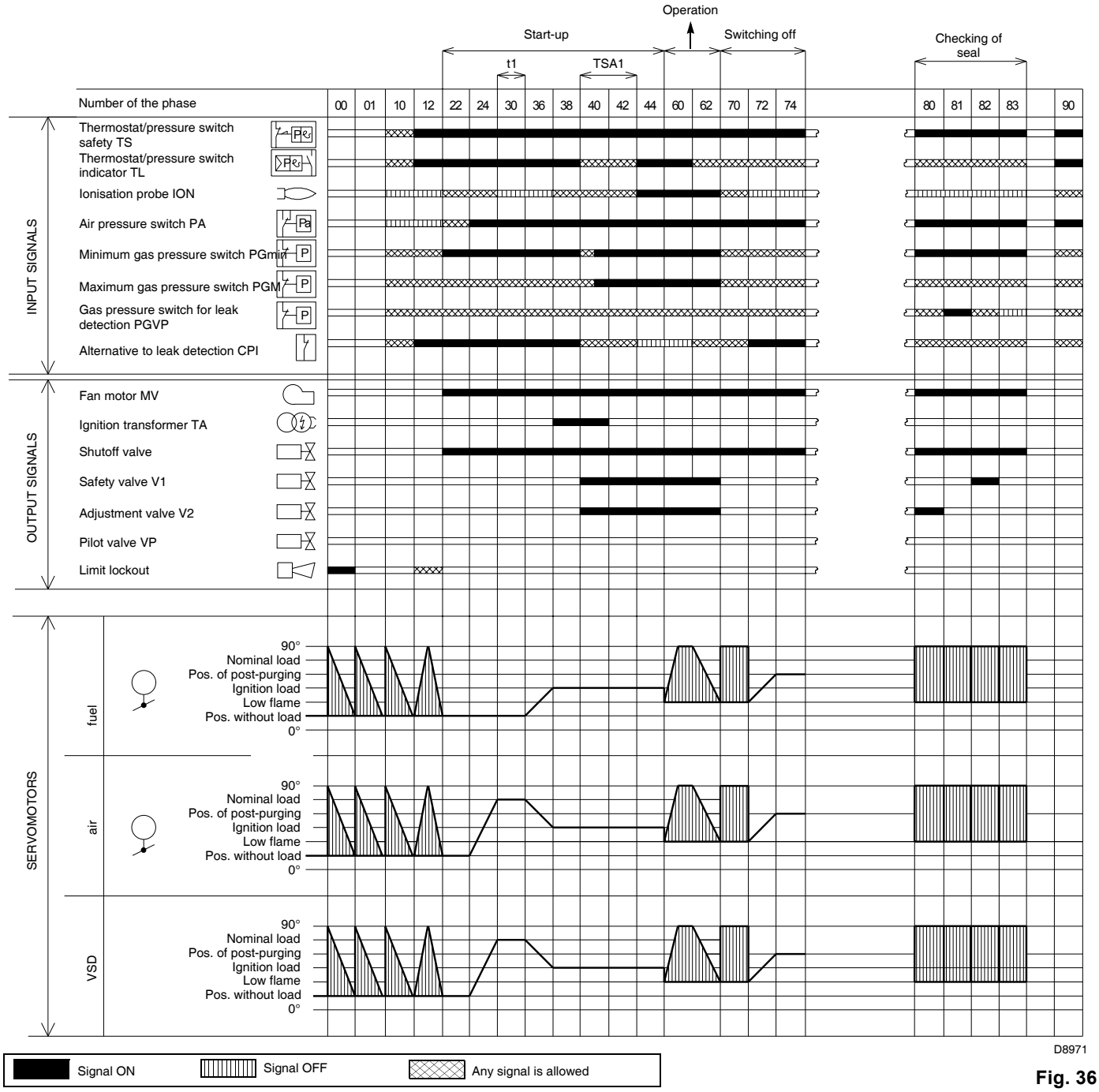

Fig. 36

List of phases

Ph00	Lockout phase	Ph44	t44 = interval time 1
Ph01	Safety phase	Ph60	Operation
Ph10	t10 = closure in pause	Ph62	t62 = max. time to reach the low flame (the burner moves to the switch-off position)
Ph12	Standby	Ph70	t13 = post-combustion time
Ph22	t22 = Uphill train of the fan motor (fan motor = ON, safety valve = ON)	Ph72	The burner moves to the post-purging position
Ph24	The burner moves to the pre-purging position	Ph74	t8 = post-purging time
Ph30	t1 = pre-purging time	Ph80	t80 = emptying time (valve leak detection)
Ph36	The burner moves to the ignition position	Ph81	t81 = atmospheric test time (valve leak detection)
Ph38	t3 = pre-ignition time	Ph82	t82 = filling time (valve leak detection)

6.7 Burner adjustment

6.7.1 Output upon ignition

According to EN 676 standard:

Burners with MAX output up to 120 kW
Ignition can occur at the maximum operation output level.
Example:
- ➤ max. operation output of 120 kW
- ➤ max. ignition output 120 kW

Burners with MAX output above 120 kW
Ignition must occur at a lower output than the max. operation output.
If ignition output does not exceed 120 kW, no calculations are required. If ignition output exceeds 120 kW, the regulatory standard sets that the value be defined according to the control box safety time "ts":
for "ts" = 3s, ignition output must be equal to or less than 1/3 of the max. operation output.

Example
MAX operation output of 450 kW.
The ignition output must be equal to or less than 150 kW with ts = 3s

In order to measure the ignition output:
- ➤ disconnect the plug-socket 7) (Fig. 5) on the ionisation probe cable (the burner will fire and then go into lockout after the safety time has elapsed);
- ➤ perform 10 consecutive ignitions with lockouts;
- ➤ on the meter, read the quantity of gas burned:
  this quantity must be equal to, or lower than, the quantity given by the formula, for ts = 3s:

$$Vg = \frac{Qa \text{ (max. burner delivery) } \times n \times ts}{3600}$$

Vg: volume supplied upon ignitions carried out (Sm^3)
Qa: ignition output (Sm^3/h)
n: number of ignitions (10)
ts: safety time (sec)

Example for G 20 gas (9.45 kWh/Sm^3):
ignition output 150 kW
corresponding to 15.87 Sm^3/h.
After 10 ignitions with lockouts, the delivery read on the meter must be equal to or lower than:

$$Vg = \frac{15.87 \times 10 \times 3}{3600} = 0.132\ Sm^3$$

6.7.2 Maximum output

The MAX output must be set within the firing rate of Fig. 3.

Gas adjustment
Measure the gas delivery on the gas meter.
A rough indication can be obtained from the table on page 21; just read the gas pressure on the pressure gauge of Fig. 38 and follow the indications given on page 21.
- ➤ If it is necessary to reduce it, lower the output gas pressure via the pressure adjuster located beneath the gas valve.
- ➤ If delivery needs to be increased, increase the adjuster outlet gas pressure.

NOTE:
If the gas pressure allows it, by closing the ring nut 2)(Fig. 16) you obtain reductions in the formation of NOx.
If on the other hand the gas pressure is lower than that required by the burner, open the ring nut 2) further than the value shown in the diagram of Fig. 17.
Check that the combustion is satisfactory and without pulsations.

6.7.3 Air adjustment

If necessary vary the degrees of the air servomotor.

6.7.4 Minimum output

The MIN output must be set within the firing rate of Fig. 3.

6.8 Operation

Burner without modulating operation kit
Once the start-up cycle is completed, the servomotor command moves on to the thermostat/pressure switch TR that controls the pressure or the temperature in the boiler.
- ➤ If the temperature or the pressure is low (so the thermostat/pressure switch TR is closed), the burner progressively increases the output as far as the MAX value (point “P9”).
- ➤ If the temperature or the pressure increases as far as the opening of the thermostat/pressure switch TR, the burner progressively reduces the output as far as the MIN value (point “P1”), and so on.
- ➤ The burner switches off when the heat request is lower than the heat supplied by the burner at MIN output. The thermostat/pressure switch TL opens and the control box carries out the switching off phase; see **“Operation sequence of the burner”** on page 44. The damper closes completely to reduce heat loss to a minimum.

Burner with modulating operation kit
See manual enclosed with the adjuster.

6.9 Ignition failure

If the burner does not switch on, there is a lockout within 3s of the electrical supply reaching the gas valve.

It may be that the gas does not arrive at the combustion head within the safety time of 3s.

In this case increase gas ignition delivery.

The arrival of gas to the pipe coupling is shown by the pressure gauge in Fig. 38.

6.10 Burner flame goes out during operation

If the flame accidentally goes out during operation, the control box carries out a recycle (i.e. it repeats the start-up phase once, and makes a further ignition attempt).
If the flame is still absent, the control box goes into lockout.

6.11 Stopping of the burner

The burner can be stopped by:

- ➤ intervening on the disconnecting switch of the electrical supply line, located on the boiler panel;
- ➤ removing the hood and intervening on the switch 0-1 of Fig. 27;
- ➤ removing the transparent protection that covers the operator panel (after loosening the relative screw), and intervening on the panel itself as explained in the **"Manual lockout procedure"** on page 29.

6.12 Measuring the ionisation current

The burner is fitted with an ionisation system to check that a flame is present.

The minimum current for control box operation is 4 µA. The operator panel shows "30%" (see parameter 954 **"List of parameters"** on page 38).

The burner provides a much higher current, so controls are not normally required.

However, if it is necessary to measure the ionisation current, disconnect the plug-socket on the ionisation probe cable and insert a direct current microammeter with a base scale of 100 µA (Fig. 37).

Carefully check the polarities!

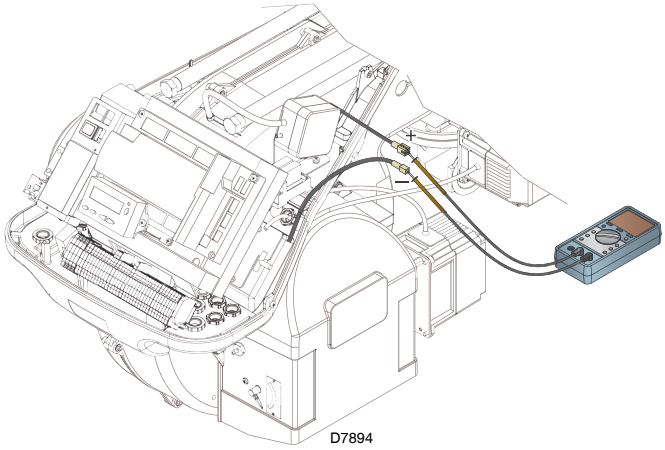

Fig. 37

6.13 Checking the air and gas pressure on the combustion head

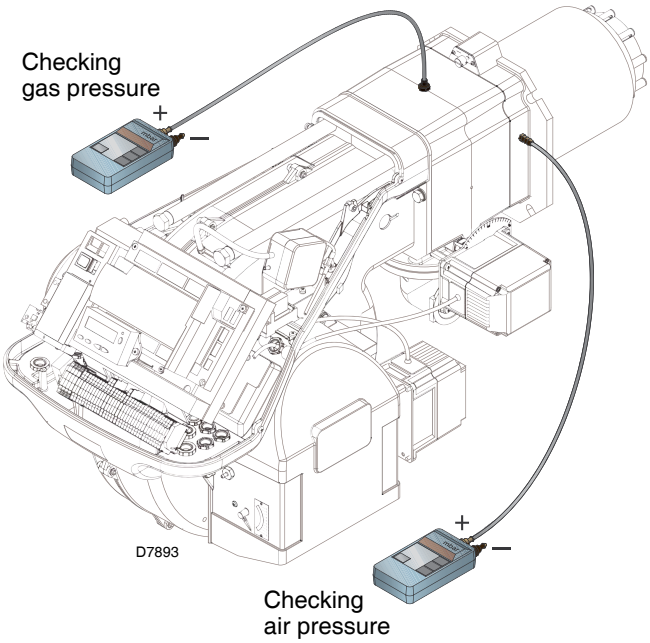

Fig. 38

6.14 Final checks (with burner operating)

- ➤ Open the thermostat/pressure switch TL:
- ➤ Open the thermostat/pressure switch TS

<u>The burner must stop</u>

- ➤ Turn the gas maximum pressure switch to the minimum end of scale position.
- ➤ Turn the air pressure switch to the maximum end of scale position.

<u>The burner must stop in lockout</u>

- ➤ Turn off the burner and cut off the voltage.
- ➤ Disconnect the minimum gas pressure switch connector.

<u>The burner must not start</u>

- ➤ Disconnect the ionisation probe wire.

<u>The burner must stop in lockout due to ignition failure</u>

- ➤ Make sure that the mechanical locking systems on the various adjustment devices are fully tightened.

7 Faults - Possible causes - Solutions

If faults arise in ignition or operations, the burner performs a "safety stop", which is signalled by the red burner lockout LED.

The display of the operator panel visualises alternately the lock-out code and the relative diagnostic.

To restore start-up conditions, refer to the **"Reset procedure"** on page 29.

When the burner starts up again, the red LED goes out.

7.1 List of error codes

Error code	Diagnostic code	Meaning of the REC37.4... system	Recommended measures
no Comm		**No communication between REC37.4… and RDI21…**	Check the wiring between control box REC37.4… and display screen RDI21…
2	**#**	**No flame at the end of TSA1**	
	1	No flame at the end of safety time 1 (TSA1)	
	2	No flame at the end of safety time 2 (TSA2)	
	4	No flame at the end of safety time 1 (TSA1) (software version = V02.00)	
3	**#**	Air pressure error	
	0	Air pressure switch off	
	1	Air pressure switch on	
	4	Air pressure on – Lockout alarm at start	
	20	Air pressure, fuel pressure on - Alarm lock at start	
	68	Air pressure, POC on – Alarm lockout at start	
	84	Air pressure, fuel pressure, POC on - Alarm lockout at start	
4	**#**	**Extraneous light**	
	0	Extraneous light during start-up	
	1	Extraneous light during switch-off	
	2	Extraneous light during start-up – Lockout alarm at start	
	6	Extraneous light during start-up, air pressure - Alarm lockout at start	
	18	Extraneous light during start-up, fuel pressure - Alarm lockout at start	
	24	Extraneous light during start-up, air pressure, fuel pressure - Alarm lockout at start	
	66	Extraneous light during start-up, POC – Alarm lockout at start	
	70	Extraneous light during start-up, air pressure, POC - Alarm lockout at start	
	82	Extraneous light during start-up, fuel pressure, POC - Alarm lockout at start	
	86	Extraneous light during start-up, air pressure, fuel pressure, poc - Alarm lockout at start	
7	**#**	**Loss of flame**	
	0	Loss of flame	
	3	Flame loss (software version = V02.00)	
	3…255	Flame loss during TÜV test (flame loss test)	
12	**#**	**Valve leak detection / CPI**	
	0	V1 leaks / CPI closed	Leak test Check if the valve on the side of the gas has any leaks. CPI Check the wiring. Check if the CPI contact opens when the valve is powered.
	1	V2 leaks / CPI open	Leak test Check if the valve on the side of the burner has any leaks. Check if the pressure switch for the leak test (PGVP) is closed when gas pressure is not present. CPI Check the wiring. Check if the CPI contact is closed.
	2	Valve leak detection test not possible	The valve leak detection is active, but the minimum gas pressure switch is selected as input for X9-04 (check parameters 238 and 241)
			The valve leak detection is active, but no input has been assigned (check

Faults - Possible causes - Solutions

Error code	Diagnostic code	Meaning of the REC37.4... system	Recommended measures
	0	POC Open	Check if the closure contact of the valve is closed
	1	POC Closed	Check the wiring. Check if the closure contact of the valve opens when the valve is checked
	64	POC Open - Alarm lockout at start	Check the wiring. Check if the closure contact of the valve is closed
19	80	Fuel pressure, POC - Alarm lockout at start	Check that the pressure switch is closed when no pressure is present from the fuel Check that there are no short-circuits
20	**#**	**Pmin**	
	0	Minimum gas/oil pressure absent	Check that there are no line interruptions
	1	Scarcity of gas - Alarm lockout at start	Check that there are no line interruptions
21	**#**	**Pmax/POC**	
	0	Pmax: Max. gas/oil pressure exceeded POC: POC open (software version = V02.00)	Check the wiring. POC: Check if the closure contact of the valve is closed
	1	POC closed (software version = V02.00)	Check the wiring. Check if the closure contact of the valve opens when the valve is checked
	64	POC Open - Alarm lockout at start	Check the wiring. Check if the contact of the valve opens when the valve is checked
22 OFF S	**#**	**Safety circuit/Burner flange**	
	0	Safety circuit open /Burner flange open	
	1	Safety circuit open /Burner flange open - Alarm lockout at start	
	3	Safety circuit open /Burner flange open, extraneous light - Alarm lockout at start	
	5	Safety circuit open /Burner flange open, extraneous light - Alarm lockout at start	
	17	Safety circuit open /Burner flange open, extraneous light - Alarm lockout at start	
	19	Safety circuit open /Burner flange open, extraneous light - Alarm lockout at start	
	21	Safety circuit open /Burner flange open, extraneous light - Alarm lockout at start	
	23	Safety circuit open /Burner flange open, extraneous light, air pressure, fuel pressure - Alarm lockout at start	
	65	Safety circuit /Burner flange open, POC - Alarm lockout at start	
	67	Safety circuit open /Burner flange open, extraneous light, POC - Alarm lockout at start	
	69	Safety circuit open /Burner flange open, air pressure, POC - Alarm lockout at start	
	71	Safety circuit open /Burner flange open, extraneous light, air pressure, POC - Alarm lockout at start	
	81	Safety circuit open /Burner flange open, fuel pressure, POC - Alarm lockout at start	
	83	Safety circuit open /Burner flange open, extraneous light, air pressure, POC - Alarm lockout at start	
	85	Safety circuit open /Burner flange, air pressure, fuel pressure, POC - Alarm lockout at start	
	87	Safety circuit open /Burner flange, extraneous light, air pressure, fuel pressure, POC - Alarm lockout at start	
50 - 58	**#**	**Internal error**	Carry out a reset; if the error arises repeatedly, replace the control box
60	**0**	**Internal error: no valid load checking device**	Carry out a reset; if the error arises repeatedly, replace the control box
65 - 67	**#**	**Internal error**	Carry out a reset; if the error arises repeatedly, replace the control box
70	**#**	**Fuel/air checking error: Calculation position in modulation**	
	23	Invalid load	No valid load
	26	Curve points not defined	Adjust the curve points of all the actuators
71	**#**	**Special position not defined**	
	0	Standby position	Set the standby position of all the servomotors used
	1	Post-purging position	Set the post-purging position of all the servomotors used
	2	Pre-purging position	Set the pre-purging position of all the servomotors used
	3	Ignition position	Set the ignition position of all the servomotors used
72	**#**	**Fuel/air internal checking error:**	Carry out a reset; if the error arises repeatedly, replace the control box
		Fuel/air internal checking error: multistep calculation	

Error code	Diagnostic code	Meaning of the REC37.4... system	Recommended measures
	1	Check synchronisation data, different current load	
	2	Check synchronisation data, different target load	
	4	Check synchronisation data, different target positions	May be caused by different standardisation speeds (for example following the resetting of the data set) when the VSD is active -> perform the standardisation again and check the regulation of the fuel/air ratio.
	16	Check synchronisation data, different positions reached	
76	**#**	**Fuel/air internal checking error:**	Carry out a reset; if the error arises repeatedly, replace the control box
80	**#**	**VSD control range limit**	The standard unit could not correct the speed difference and has reached a limit in the control range. 1. The standard unit is not standardised for this motor ----> repeat the standardisation. **WARNING** **Check the settings of the air/fuel ratio control!** 2. The VSD train times are not shorter than those of the standard unit (parameters 522, 523). 3. The VSD characteristic is not linear. The VSD voltage input configuration must correspond with that of the standard unit (parameter 645). 4. The VSD does not follow the changes of the standard unit quickly enough. Check the VSD settings (input filter, slide compensation, different latent speeds).
	1	Lower control range limit	The VSD speed was too high
	2	Upper control range limit	The VSD speed was too low
81	**1**	**Interruption in speed limit input**	Excessive electromagnetic interference on the sensor line -> improve the EMC
82	**#**	**Error during VSD speed standardisation**	
	1	Standardisation time-out (the descent time of the VSD train is too long)	Time-out at the end of the standardisation, during deceleration of VSD 1. The VSD train times are not shorter than those of the standard unit (parameter: 523)
	2	Logging of the standardised speed not successful	Error during the logging of the standardised speed ---> block the standard unit, reset it and repeat the standardisation
	3	Speed sensor circuit open	The standard unit does not receive pulses from the speed sensor: 1. The motor does not rotate. 2. The speed sensor is not connected. 3. The speed sensor is not activated by the sensor disc (check the distance)
	4	Variation in speed / VSD acceleration time too long / speed below the minimum limit for standardisation	The motor has not reached a stable speed after acceleration. 1. The VSD train times are not shorter than those of the standard unit (parameters 522, 523). 2. The VSD characteristic is not linear. The VSD voltage input configuration must correspond with that of the standard unit (parameter 645). 3. The VSD does not follow the changes of the standard unit quickly enough. Check the VSD settings (input filter, slide compensation, different latent speeds). 4. The VSD speed is below the minimum for standardisation (650 1/min.).
	5	Incorrect rotation direction	The motor rotation direction is incorrect. 1. The motor does not rotate in the correct direction ---> modify the parameterisation of the rotation direction, or invert 2 phases. 2. The sensor disc is incorrectly assembled ---> turn the sensor disc.
	6	Implausible speed sensor signals	The required pulse pattern (60°, 120°, 180°) has not been correctly identified. 1. The speed sensor does not detect all the noses of the sensor disc ---> check the distance 2. When the motor rotates, other metal parts are detected along with the noses ---> improve the assembly. 3. Electromagnetic interference on the sensor lines ---> check the cable path, improve the EMC
	7	Standardised speed not valid	The standardised speed measured is not within the allowed range. 1.The motor turns too slowly or too quickly.
	15	Speed deviation µC1 + µC2	Microcomputer speeds 1 and 2 have an excessive deviation. This may be caused by incorrect standardised speeds (e.g. after the reintegration of a set of data in a new unit) ---> repeat the standardisation and check the air/fuel ratio.
	20	Incorrect phase of the phase controller	The standardisation was performed in the wrong phase. The only phases allowed are ≤ 12 ---> controller OFF, restart the standardisation.
	21	Safety loop/burner flange open	The safety loop or burner flange is open ---> repeat the standardisation with the safety loop closed
	22	Pneumatic actuator without reference	The air actuator has no reference, or has lost it. 1. Check whether the reference position can be approached. 2. Check whether the actuators have been swapped over. 3. If the error only arises after the start of standardisation, the actuator may be overloaded and unable to reach its destination.
	23	VSD deactivated	The standardisation was started with the VSD deactivated ---> activate the VSD and repeat the standardisation
			The standardisation was started without a valid operation mode ---> activate a

Error code	Diagnostic code	Meaning of the REC37.4... system	Recommended measures
	Bit 0 Valence 1	Lower control range limit	The speed was not reached because the control range limit was activated ---> for the measurements, see error code 80
	Bit 1 Valence 2...3	Greater control range limit	The speed was not reached because the control range limit was activated ---> for the measurements, see error code 80
	Bit 2 Valence 4...7	Stop caused by electromagnetic interference	The speed has not been reached because there are too many electromagnetic interferences on the sensor line. For the measurements, see error code 81.
	Bit 3 Valence ≥ 8	Curve too steep in terms of train speed	The speed was not reached because the curve was too steep. 1. With a train REC3... of 20 s, the speed variation between 2 points of the curve (in modulating mode) cannot exceed 10%. With a train REC3... of 10 s, the speed variation between 2 points of the curve (in modulating mode) cannot exceed 20%. With a train REC3... of 5 s, the speed variation between 2 points of the curve (in modulating mode) cannot exceed 40%. ---> Between the ignition point (P0) and the low flame point (P1), the speed in modulating mode may vary by a maximum of 40%, regardless of the train REC3…. 2. The VSD train must be about 20% faster than the train of the standard unit (parameters 522, 523).
	Bit 4 Valence ≥ 16	Speed signal interruption	No speed detected, despite the control. 1Check whether the motor rotates. 2. Check whether the speed sensor provides a signal (LED / check the distance from the sensor disc). 3. Check the VSD wiring.
	Bit 5 Valence ≥ 32	Quick switch-off due to excessive speed deviation	For about 1 s, the speed deviation was >10% outside the envisaged range. 1. Check the train times of REC3.... and VSD. 2. Check the VSD wiring.
84	**#**	**Servomotors curve slope**	
	Bit 0 Valence ≥ 1	VSD: Curve too steep in terms of train speed	1. With a train REC3... of 20 s, the speed variation between points of the curve (in modulating mode) cannot exceed 10%. .With a train REC3... of 10 s, the speed variation between points of the curve (in modulating mode) cannot exceed 20%. With a train REC3... of 5 s, the speed variation between points of the curve (in modulating mode) cannot exceed 40%. ---> Between the ignition point (P0) and the low flame point (P1), the speed in modulating mode may vary by a maximum of 40%, regardless of the train REC3…. 2. The VSD train must be about 20% faster than the train of the standard unit (parameters 522, 523).
	Bit 1 Valence 2..3	Fuel servomotor: Curve too steep in terms of train ratio	The slope of the curve can correspond to a maximum position variation of 31° between 2 points of the modulation curve
	Bit 2 Valence 4..7	Air servomotor: Curve too steep in terms of train ratio	The slope of the curve can correspond to a maximum position variation of 31° between 2 points of the modulation curve
85	**#**	**Reference error of a servomotor**	
	Bit 0 Valence 1	Reference error of the fuel servomotor	The reference of the fuel servomotor was not successful. It was not possible to reach the reference point. 1. Check if the servomotors have been inverted. 2. Check if the servomotor is blocked or overloaded.
	Bit 1 Valence 2…3	Reference error of the air servomotor	The reference of the air servomotor was not successful. It was not possible to reach the reference point. 1. Check if the servomotors have been inverted. 2. Check if the servomotor is blocked or overloaded.
	Bit 7 Valence ≥ 128	Reference error owing to parameter modification	The parameterisation of an actuator (e.g. the reference position) has been modified. This error will be visualised to start up a new reference.

Error code	Diagnostic code	Meaning of the REC37.4... system	Recommended measures
86	**#**	**Fuel servomotor error**	
	0	Position error	It was not possible to reach the target position within the requested tolerance range. 1. Check if the servomotor is blocked or overloaded.
	Bit 0 Valence 1	Circuit open	Circuit open shown on the servomotor connection. 1. Check the wiring (the voltage between pin 5 or 6 and 2 of the XS4 connector must be > 0.5 V).
	Bit 3 Valence ≥ 8	Curve too steep in terms of train ratio	The slope of the curve can correspond to a maximum position modification of 31° between 2 points of the modulation curve.
	Bit 4 Valence ≥ 16	Deviation of section compared with the last reference	Overloading of the servomotor or servomotor subjected to mechanical torsion. 1. Check if the servomotor is blocked in any point along its range of action. 2. Check if the torque is sufficient for the application.
87	**#**	**Air servomotor error**	
	0	Position error	It was not possible to reach the target position within the requested tolerance range. 1. Check if the servomotor is blocked or overloaded.
	Bit 0 Valence 1	Circuit open	Circuit open shown on the servomotor connection. 1. Check the wiring (the tension between pin 5 or 6 and 2 of the XS4 connector must be > 0.5 V).
	Bit 3 Valence ≥ 8	Curve too steep in terms of train ratio	The slope of the curve can correspond to a maximum position modification of 31° between 2 points of the modulation curve.
	Bit 4 Valence ≥ 16	Deviation of section compared with the last reference	Overloading of the servomotor or servomotor subjected to mechanical torsion. 1. Check if the servomotor is blocked in any point along its range of action. 2. Check if the torque is sufficient for the application.
90 - 91	**#**	**Burner internal checking error**	
93	**#**	**Flame signal acquisition error**	
	3	Short circuit of the sensor	Short circuit in the QRB sensor... 1. Check the wiring. 2. Flame detector probably faulty.
95	**#**	**Relay supervision error**	
	3 Ignition transformer 4 Fuel valve 1 5 Fuel valve 2 6 Fuel valve 3	External power supply - Contact active	Check the wiring.
96	**#**	**Relay supervision error**	
	3 Ignition transformer 4 Fuel valve 1 5 Fuel valve 2 6 Fuel valve 3	The relay contacts have joined together	Check the contacts: 1. Control box connected to the power supply: the fan output must be without voltage. 2. Disconnect the power supply. Disconnect the fan. The resistive connection between the fan output and the neutral wire is not allowed. If one of the 2 tests fails, replace the control box because the contacts are definitively joined together and it is no longer possible to guarantee safety.
97	**#**	**Relay supervision error**	
	0	The safety relay contacts have joined together or the safety relay has been powered by an external power supply	Check the contacts: 1. Control box connected to the power supply: the fan output must be without voltage. 2. Disconnect the power supply. Disconnect the fan. The resistive connection between the fan output and the neutral wire is not allowed. If one of the 2 tests fails, replace the control box because the contacts are definitively joined together and it is no longer possible to guarantee safety.
98	**#**	**Relay supervision error**	
	2 – Safety valve 3 Ignition transformer 4 Fuel valve 1 5 Fuel valve 2 6 Fuel valve 3	The relay does not start up	Carry out a reset; if the error arises repeatedly, replace the unit

Faults - Possible causes - Solutions

Error code	Diagnostic code	Meaning of the REC37.4... system	Recommended measures
99	**#**	**Relay internal checking error**	Carry out a reset; if the error arises repeatedly, replace the control box
	3	Relay internal checking error	Carry out a reset; if the error arises repeatedly, replace the control box Software version V03.10: If error C:99 D:3 occurs during the standardisation of the VSD, temporarily deactivate the Alarm function at the start of the pre-purging phase (parameter 210 = 0) or interrupt the signal controller-ON
100	**#**	**Relay internal checking error**	Carry out a reset; if the error arises repeatedly, replace the control box
105	**#**	**Contact sampling internal error**	
	0 Min. pressure switch 1 Max. pressure switch 2 Valve operation test pressure switch 3 Air pressure 4 Load controller open 5 Load controller on/ off 6 Load controller closed 7 Safety loop / burner flange 8 Safety valve 9 Ignition transformer 10 Fuel valve 1 11 Fuel valve 2 12 Fuel valve 3 13 Reset	Blocked upon irregularity	Can be caused by capacitive loads or presence of DC voltage on the main power supply of the control box. The diagnostic code indicates the input in which the problem arose
106-108	**#**	**Contact request internal error**	Carry out a reset; if the error arises repeatedly, replace the control box
110	**#**	**Voltage monitoring test internal error**	Carry out a reset; if the error arises repeatedly, replace the control box
111	**0**	**Low level of power supply**	Insufficient mains voltage. Conversion of the diagnostic code Voltage value (230 V AC : 1,683)
112	**0**	**Reset power supply voltage**	Error code for the carrying out of a reset in the event of power supply restoration (absence of error)
113	**#**	**Mains voltage supervision internal error**	Carry out a reset; if the error arises repeatedly, replace the control box
115	**#**	**Control box meter internal error**	
116	**0**	**Life cycle of the control box in the critical interval (250.000 Start ups)**	The envisaged life cycle of the control box has been exceeded. Replace it.
117	**0**	**Life cycle of the control box exceeded**	The switch-off threshold has been reached.
120	**0**	**Interruption of fuel limiting meter input**	Too many disturbance impulses on the input of the fuel meter. Improve the electromagnetic compatibility.
121-124	**#**	**EEPROM access internal error**	Carry out a reset, repeat and check the last setting of the parameters. Restore the group of parameters. If the error arises repeatedly, replace the control box
125	**#**	**EEPROM reading access internal error**	Carry out a reset, repeat and check the last setting of the parameters. If the error arises repeatedly, replace the control box
126	**#**	**EEPROM writing access internal error**	Carry out a reset, repeat and check the last setting of the parameters. If the error arises repeatedly, replace the control box
127	**#**	**EEPROM access internal error**	Carry out a reset, repeat and check the last setting of the parameters. Restore the group of parameters. If the error arises repeatedly, replace the control box
128	**0**	**EEPROM access internal error - synchronisation during the initialisation**	Carry out a reset; If the error arises repeatedly, replace the control box
129	**#**	**EEPROM access internal error – command synchronisation**	Carry out a reset, repeat and check the last setting of the parameters. If the error arises repeatedly, replace the control box
130	**#**	**EEPROM access internal error - time-out**	Carry out a reset, repeat and check the last setting of the parameters. If the error arises repeatedly, replace the control box
131	**#**	**EEPROM access internal error - page interrupted**	Carry out a reset, repeat and check the last setting of the parameters. If the error arises repeatedly, replace the control box
132	**#**	**EEPROM register initialisation internal error**	Carry out a reset; If the error arises repeatedly, replace the control box
133-135	**#**	**EEPROM access internal error – request synchronisation**	Carry out a reset, repeat and check the last setting of the parameters. If the error arises repeatedly, replace the control box
136	**1**	**Restoration started**	The restoration of a backup has been started (no error)
137	**#**	**Internal error – backup / restoration**	

Error code	Diagnostic code	Meaning of the REC37.4... system	Recommended measures
	243 (-13)	Backup – the data comparison between the internal microprocessors is irregular	Repeat the reset and backup
	244 (-12)	The backup data are incompatible	The backup data are incompatible with the current version of the software; the restoration is not possible
	245 (-11)	Error in access to the parameter Restore_Complete	Repeat the reset and backup
	246 (-10)	Restoration – time-out during logging in EEPROM	Repeat the reset and backup
	247 (-9)	The data received are contradictory	The series of backup data is not valid; restoration is not possible
	248 (-8)	The restoration cannot currently be carried out	Repeat the reset and backup
	249 (-7)	Restoration – interruption caused by inadequate identification of the burner	The backup has an inadequate identification of the burner and must not be transferred to the control box
	250 (-6)	Backup – the CRC of a page is not correct	The series of backup data is not valid; restoration is not possible
	251 (-5)	Backup – the identification of the burner is not defined	Define the identification of the burner and repeat the backup
	252 (-4)	After restoration, the pages are still in INTERRUPTION	Repeat the reset and backup
	253 (-3)	The restoration cannot currently be carried out	Repeat the reset and backup
	254 (-2)	Interruption owing to transmission error	Repeat the reset and backup
	255 (-1)	Interruption owing to time-out during the restoration	Carry out a reset, check the connections and repeat the backup
146	**#**	**Time-out of the system automation interface**	Refer to the Modbus User Documentation (A7541)
	1	Modbus time-out	
150	**#**	**TÜV test**	
	1 (-1)	Invalid phase	The TÜV test can only be started in phase 60 (operation)
	2 (-2)	The TÜV test default output is too low	The output of the TÜV test must be lower than the minor output limit
	3 (-3)	The TÜV test default output is too high	The output of the TÜV test must be greater than the upper output limit
	4 (-4)	Manual interruption	No error: Manual interruption of the TÜV test by the user
	5 (-5)	TÜV test timeout	No flame loss after the fuel valves have been closed 1. Check for potential extraneous lights 2. Check that there are no short-circuits 3. Check that one of the valves is leaking
165	**#**	**Internal error**	
166	**0**	**Watchdog reset internal error**	
167	**#**	**Manual lockout**	The control box has been manually blocked (no error)
	1	Manual lockout from remote reset command	
	2	Manual lockout from RDI21…	
	3	Manual lockout from PC interface	
	8	Manual lockout from RDI21… Timeout/interrupted communication	During a regulation of the curve via the operating panel RDI21…the timeout for the operating menu is passed (setting via the 127 parameter), or the communication between REC3... and RDI21 has been interrupted
	9	Manual lockout from PC interface Communication interrupted	During an adjustment of the curve via the PC interface, the communication between REC3... and the operating panel has been interrupted for more than 30 s
	33	Manual lockout after the PC tool has performed a tentative reset	The PC tool has performed a tentative reset, even if the system has worked correctly
168-171	**#**	**Internal error management**	Carry out a reset; if the error arises repeatedly, replace the control box
200 off	**#**	**System free of errors**	No error
201 off VA	**#**	**Lockout or error at start**	Lockout or error due to lack of unit parameter settings
	Bit 0 Valency 1	No valid operation mode	
	Bit 1 Valency 2..3	No fuel train defined	
	Bit 2 Valency 4..7	No curve defined	
	Bit 3 Valency 8..15	Standardisation speed not defined	
	Bit 4 Valency 16..31	Backup / Reset impossible	
202	**#**	**Selection of internal operation mode**	Redefine the operation mode (parameter 201)
203	**#**	**Internal error**	Redefine the operation mode (parameter 201) Carry out a reset; if the error arises repeatedly, replace the control box
204	**Phase number**	**Program stop**	The program stop is active (no error)
205	**#**	**Internal error**	Carry out a reset; if the error arises repeatedly, replace the control box
206	**0**	**Combination of control box and operator panel not allowed**	
207	**#**	**Compatibility of control box with operator panel**	

Faults - Possible causes - Solutions

Error code	Diagnostic code	Meaning of the REC37.4... system	Recommended measures
240	#	Internal error	Carry out a reset; if the error arises repeatedly, replace the control box
245	#	Internal error	Carry out a reset; if the error arises repeatedly, replace the control box
250	#	Internal error	Carry out a reset; if the error arises repeatedly, replace the control box

8 Maintenance

8.1 Notes on safety for the maintenance

The periodic maintenance is essential for the good operation, safety, yield and duration of the burner.

It allows you to reduce consumption and polluting emissions and to keep the product in a reliable state over time.

DANGER

The maintenance interventions and the calibration of the burner must only be carried out by qualified, authorised personnel, in accordance with the contents of this manual and in compliance with the standards and regulations of current laws.

Before carrying out any maintenance, cleaning or checking operations:

DANGER

Disconnect the electrical supply from the burner by means of the main system switch.

DANGER

Close the fuel interception tap.

8.2 Maintenance programme

8.2.1 Maintenance frequency

The gas combustion system should be checked at least once a year by a representative of the manufacturer or another specialised technician.

8.2.2 Checking and cleaning

Combustion
Carry out an analysis of the combustion discharge gases.
Significant differences with respect to the previous check indicate the points where more care should be exercised during maintenance.

Combustion head
Open the burner and make sure that all components of the combustion head are in good condition, not deformed by the high temperatures, free of impurities from the surroundings and correctly positioned.

Burner
Clean the outside of the burner.
Clean and grease the adjustable profile of the cams.

Fan
Check to make sure that no dust has accumulated inside the fan or on its blades, as this condition will cause a reduction in the air flow rate and provoke polluting combustion.

Boiler
Clean the boiler as indicated in its accompanying instructions in order to maintain all the original combustion characteristics in-

Gas filter
Change the gas filter when it is dirty.

Combustion
If the combustion values found at the start of the intervention do not satisfy current standards or anyway indicate a poor state of combustion (consult the table below), contact the Technical Assistance Service for the necessary adjustments.

EN 676		Air excess		
		Max. output $\lambda \leq 1.2$		Min. output $\lambda \leq 1.3$
GAS	Theoretical max. CO_2 0 % O_2	Calibration CO_2 %		CO mg/kWh
		$\lambda = 1.2$	$\lambda = 1.3$	
G 20	11.7	9.7	9.0	≤ 100
G 25	11.5	9.5	8.8	≤ 100
G 30	14.0	11.6	10.7	≤ 100
G 31	13.7	11.4	10.5	≤ 100

8.3 Opening the burner

Disconnect the burner from the electrical supply.

- ➤ Loosen the 4 screws 1)(Fig. 39) and remove the hood 2).
- ➤ Assemble the two extensions supplied on the slide bars 4) (TL versions).
- ➤ Disconnect the plug 7) and unscrew the cable grommet 8).
- ➤ Disconnect the socket from the maximum gas pressure switch.
- ➤ Remove the screws 3) and move the burner backwards by about 100 mm on the slide bars 4).
- ➤ Disconnect the probe and electrode leads and then pull the burner fully back.

At this point it is possible to extract the inner part 5) after having removed the screw 6).

8.4 Closing the burner

- ➤ Push the burner to approximately 100 mm from the pipe coupling.
- ➤ Reconnect the cables and slide in the burner until it comes to a stop.
- ➤ Connect the servomotor plug 7) (Fig. 39) and tighten the cable grommet 8).
- ➤ Connect the socket of the maximum gas pressure switch.
- ➤ Replace the screws 3) and carefully pull the probe and electrode cables outwards until they are slightly taut.
- ➤ Disassemble the two extensions from the slide bars 4).

After carrying out maintenance, cleaning or checking operations, reassemble the hood and all the safety and protection devices of the burner.

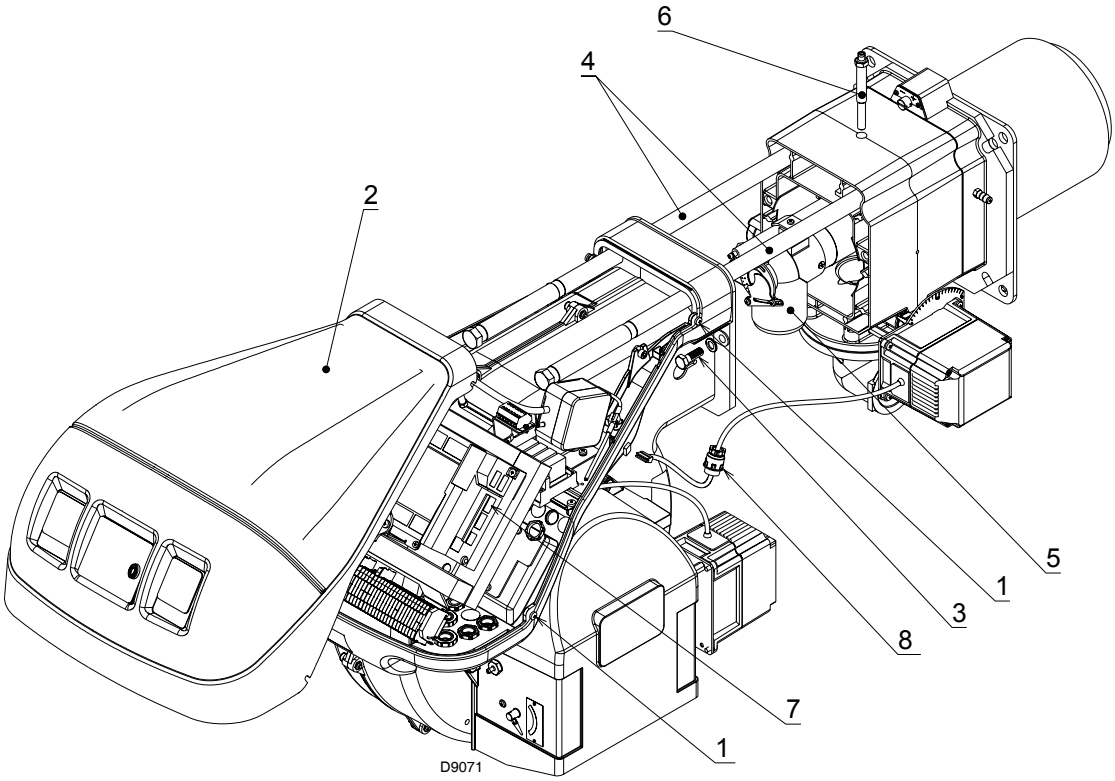

Fig. 39

A Appendix - Accessories

Output power regulator kit for modulating operation

With the modulating operation, the burner continually adapts the power to the request for heat, ensuring great stability for the parameter controlled: temperature or pressure.

Two components should be ordered:

- the output power regulator to be installed on the burner;
- the probe to be installed on the heat generator.

Parameter to be checked		Probe		Output regulator	
	Adjustment field	Type	Code	Type	Code
Temperature	- 100...+ 500°C	PT 100	3010110	RWF40	3010414
Pressure	0...2.5 bar 0...16 bar	Output probe 4...20mA	3010213 3010214		

Software interface kit (ACS410 + OCI410.30) - Service Level

Burner	Code
RS 68/EV BLU RS 120/EV BLU RS 160/EV BLU RS 200/EV BLU	3010436

Modbus interface kit (OCI412)

Burner	Code
RS 68/EV BLU RS 120/EV BLU RS 160/EV BLU RS 200/EV BLU	3010437

Kit for LPG operation

Burner	Code	Output (kW)
RS 68/EV BLU RS 120/EV BLU RS 160/EV BLU RS 200/EV BLU	3010491	630 - 2400

PVP kit (Pressure Valve Proving)

Burner	Code
RS 68/EV BLU	3010344

NOTE:
For the other models, the PVP kit is supplied as standard equipment with the burner.

Long head kit

Burner	Kit Code	Standard head length	Head length obtained with the kit

Pipes kit (for flame inversion boilers)

Burner	Code
RS 68/EV BLU	3010247
RS 120/EV BLU	3010248
RS 160/EV BLU	3010249
RS 200/EV BLU	

Inverter kit

Burner	Code
RS 68/EV BLU	20014168
RS 120/EV BLU	20008555
RS 160/EV BLU	20011040
RS 200/EV BLU	20011040

Soundproofing box kit

Burner	Code
RS 68/EV BLU RS 120/EV BLU RS 160/EV BLU RS 200/EV BLU	3010404

Gas trains in compliance with EN 676

Refer to page 20 of the manual.

B Appendix - Firing rate on basis of air density

The firing rate of the burner shown in the manual is valid for an ambient temperature of 20 °C and an altitude of 0m above sea level (barometric pressure around 1013 mbar).

It may be that a burner has to operate with combustion air at a higher temperature and/or higher altitudes.

The heating of the air and the increase in altitude produce the same effect: the expansion of the air volume (i.e. the reduction of its density).

The delivery of the burner fan remains essentially the same, but the oxygen per m3 of air, and the thrust (discharge head) of the fan are reduced.

It is therefore important to know if the maximum output requested from the burner at a determinate combustion chamber pressure remains within the firing rate of the burner even with the changed temperature and altitude conditions.

To check it, proceed as follows:

1 Find the corrective factor F (relating to the air temperature and altitude of the system) in the table alongside.
2 Divide the output Q required from the burner by F to obtain the equivalent output Qe:

Qe = Q : F (kW)

3 In the firing rate of the burner, mark the work point identified by:
Qe = equivalent output
H1 = pressure in the combustion chamber
point A that must remain within the firing rate.
4 Trace a vertical line from point A (Fig. 1), and find the maximum pressure H2 of the firing rate.
5 Multiply H2 by F to obtain the maximum lowered pressure H3 of the firing rate

H3 = H2 x F (mbar)

If H3 is greater than H1 (Fig. 1), the burner can supply the required output.

If H3 is less than H1, it is necessary to reduce the burner output. The reduction in output is accompanied by a reduction in the combustion chamber pressure:
Qr = reduced output
H1r = reduced pressure

$$H1r = H1 \times \left(\frac{Qr}{Q}\right)^2$$

Example, 5% reduction in output:
Qr = Q x 0.95
H1r = H1 x $(0.95)^2$

With the new values - Qr and H1r - repeat steps 2 - 5.

WARNING

The combustion head should be adjusted in relation to the equivalent output Qe.

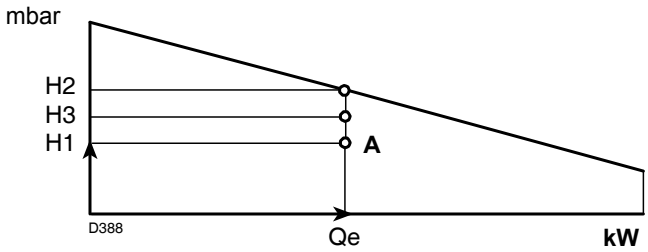

Fig. 1

Altitude m. above sea level	Average barometric pressure mbar	F Air temperature °C 0	5	10	15	20	25	30	40
0	1013	1.087	1.068	1.049	1.031	1.013	0.996	0.980	0.948
100	1000	1.073	1.054	1.035	1.017	1.000	0.983	0.967	0.936
200	989	1.061	1.042	1.024	1.006	0.989	0.972	0.956	0.926
300	978	1.050	1.031	1.013	0.995	0.978	0.962	0.946	0.916
400	966	1.037	1.018	1.000	0.983	0.966	0.950	0.934	0.904
500	955	1.025	1.007	0.989	0.972	0.955	0.939	0.923	0.894
600	944	1.013	0.995	0.977	0.960	0.944	0.928	0.913	0.884
700	932	1.000	0.982	0.965	0.948	0.932	0.916	0.901	0.872
800	921	0.988	0.971	0.954	0.937	0.921	0.906	0.891	0.862
900	910	0.977	0.959	0.942	0.926	0.910	0.895	0.880	0.852
1000	898	0.964	0.946	0.930	0.914	0.898	0.883	0.868	0.841
1200	878	0.942	0.925	0.909	0.893	0.878	0.863	0.849	0.822
1400	856	0.919	0.902	0.886	0.871	0.856	0.842	0.828	0.801
1600	836	0.897	0.881	0.866	0.851	0.836	0.822	0.808	0.783
1800	815	0.875	0.859	0.844	0.829	0.815	0.801	0.788	0.763
2000	794	0.852	0.837	0.822	0.808	0.794	0.781	0.768	0.743
2400	755	0.810	0.796	0.782	0.768	0.755	0.742	0.730	0.707
2800	714	0.766	0.753	0.739	0.726	0.714	0.702	0.690	0.668

C Appendix - Electrical panel layout

1	**Index of layouts**
2	Indication of references
3	Single-wire output layout
4	Functional layout REC37....
5	Functional layout REC37....
6	Functional layout REC37....
7	Electrical wiring that the installer is responsible for
8	Functional layout RWF40

2 Indication of references

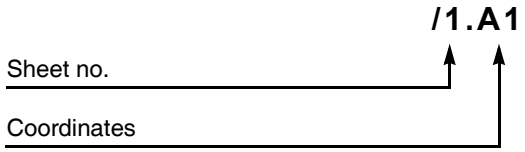

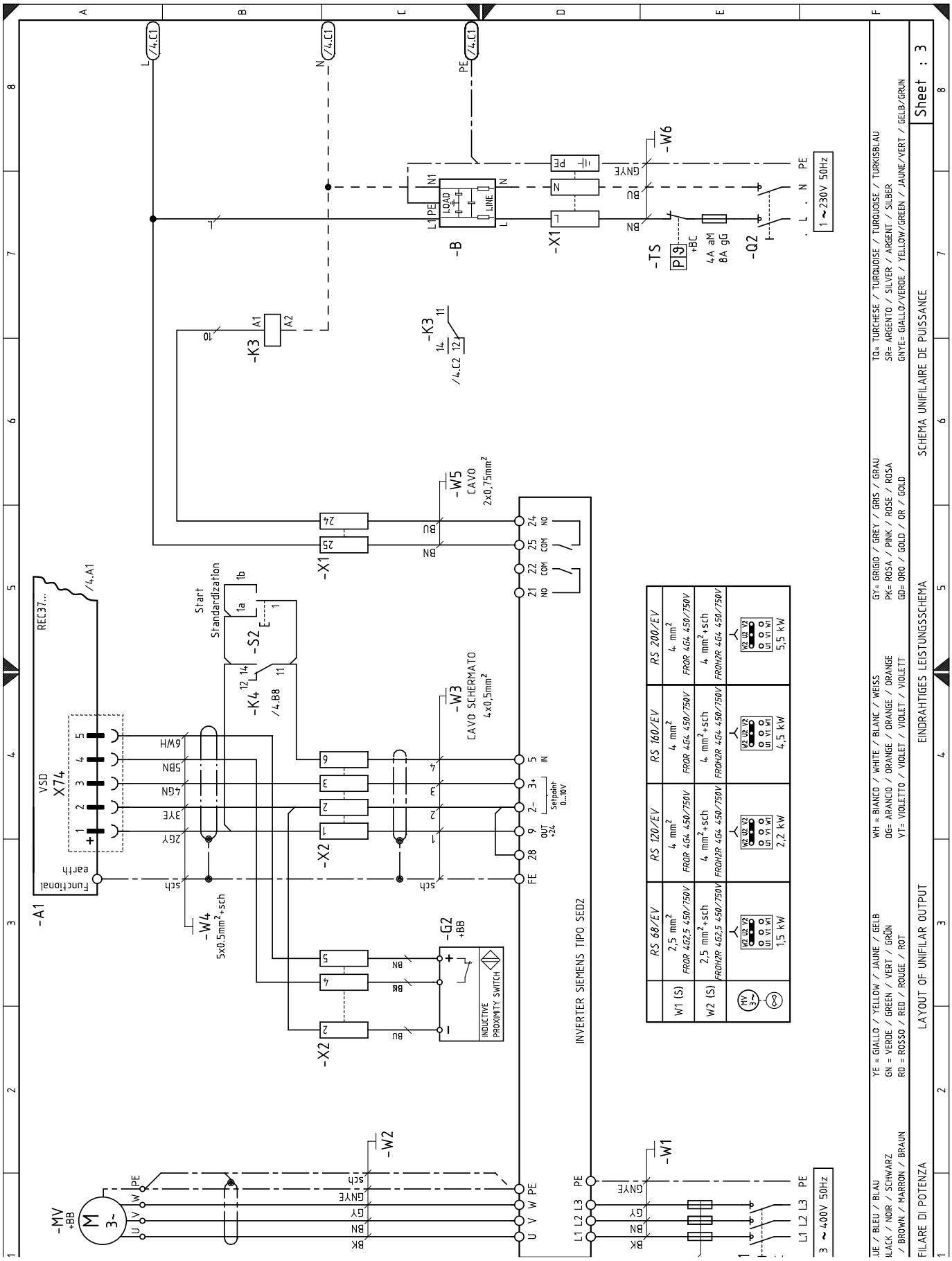

-A1
VSD
X74
REC37...
/4.A1
Functional earth
-W4
5x0.5mm²+sch
-W3
CAVO SCHERMATO
4x0,5mm²
-W5
CAVO
2x0,75mm²
-W6
-W2
-W1
-MV
+BB
-G2
+BB
INDUCTIVE PROXIMITY SWITCH
-X1
-X2
-K3
-K4
/4.B8
-S2
Start
Standardization
-B
-TS
-Q2
4A aM
8A gG
1 ~ 230V 50Hz
3 ~ 400V 50Hz
INVERTER SIEMENS TIPO SED2
RS 68/EV
RS 120/EV
RS 160/EV
RS 200/EV
W1 (S)
W2 (S)
2,5 mm²
4 mm²
4 mm²+sch
FROR 4G4 450/750V
FROH2R 4G4 450/750V
1,5 kW
2,2 kW
4,5 kW
5,5 kW
YE = GIALLO / YELLOW / JAUNE / GELB
GN = VERDE / GREEN / VERT / GRÜN
RD = ROSSO / RED / ROUGE / ROT
WH = BIANCO / WHITE / BLANC / WEISS
OG= ARANCIO / ORANGE / ORANGE / ORANGE
VT= VIOLETTO / VIOLET / VIOLET / VIOLETT
GY= GRIGIO / GREY / GRIS / GRAU
PK= ROSA / PINK / ROSE / ROSA
GD= ORO / GOLD / OR / GOLD
TQ= TURCHESE / TURQUOISE / TURQUOISE / TURKISBLAU
SR= ARGENTO / SILVER / ARGENT / SILBER
GNYE= GIALLO/VERDE / YELLOW/GREEN / JAUNE/VERT / GELB/GRUN
FILARE DI POTENZA
LAYOUT OF UNIFILAR OUTPUT
EINDRAHTIGES LEISTUNGSSCHEMA
SCHEMA UNIFILAIRE DE PUISSANCE
Sheet : 3

Appendix - Electrical panel layout

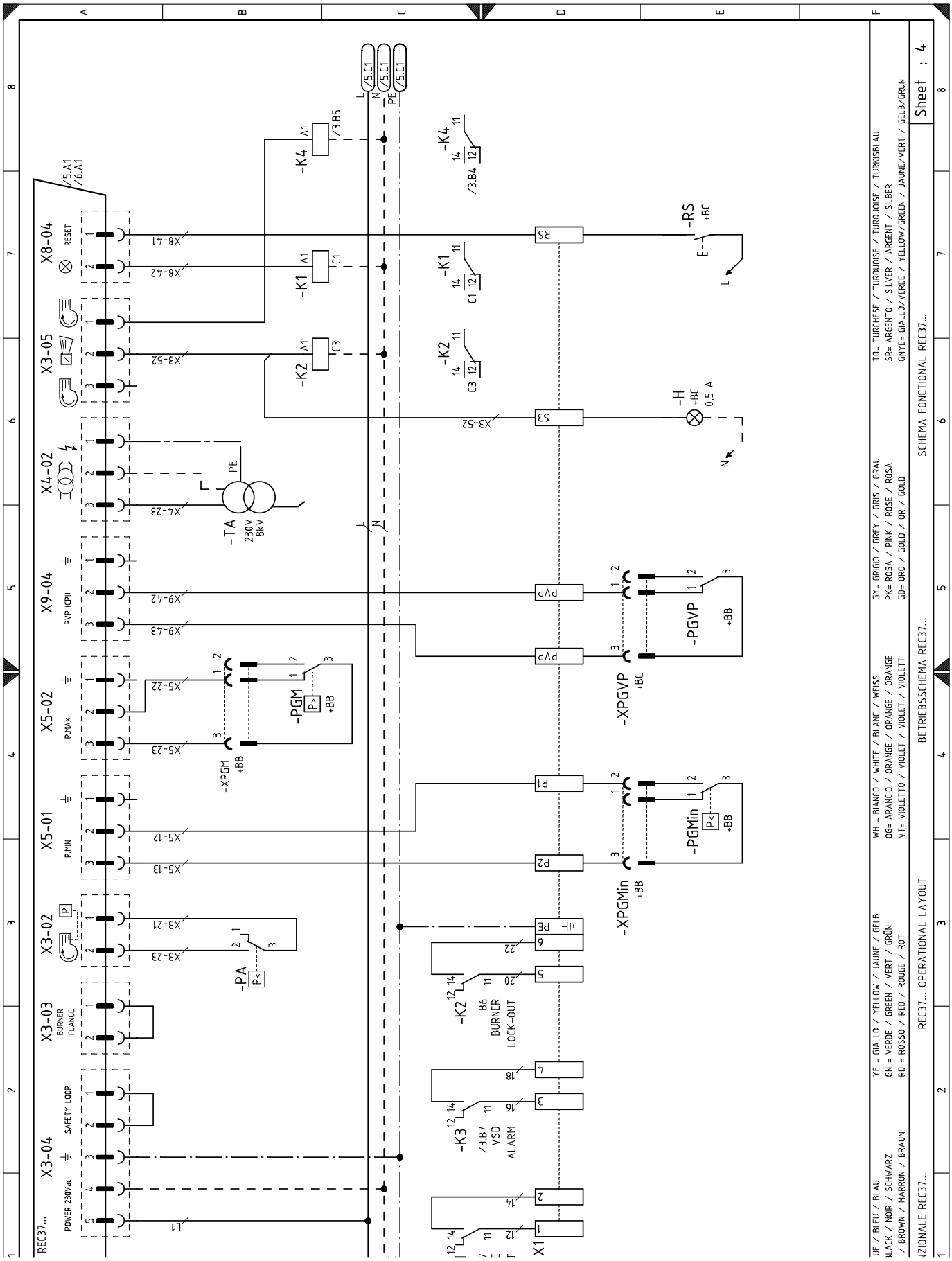

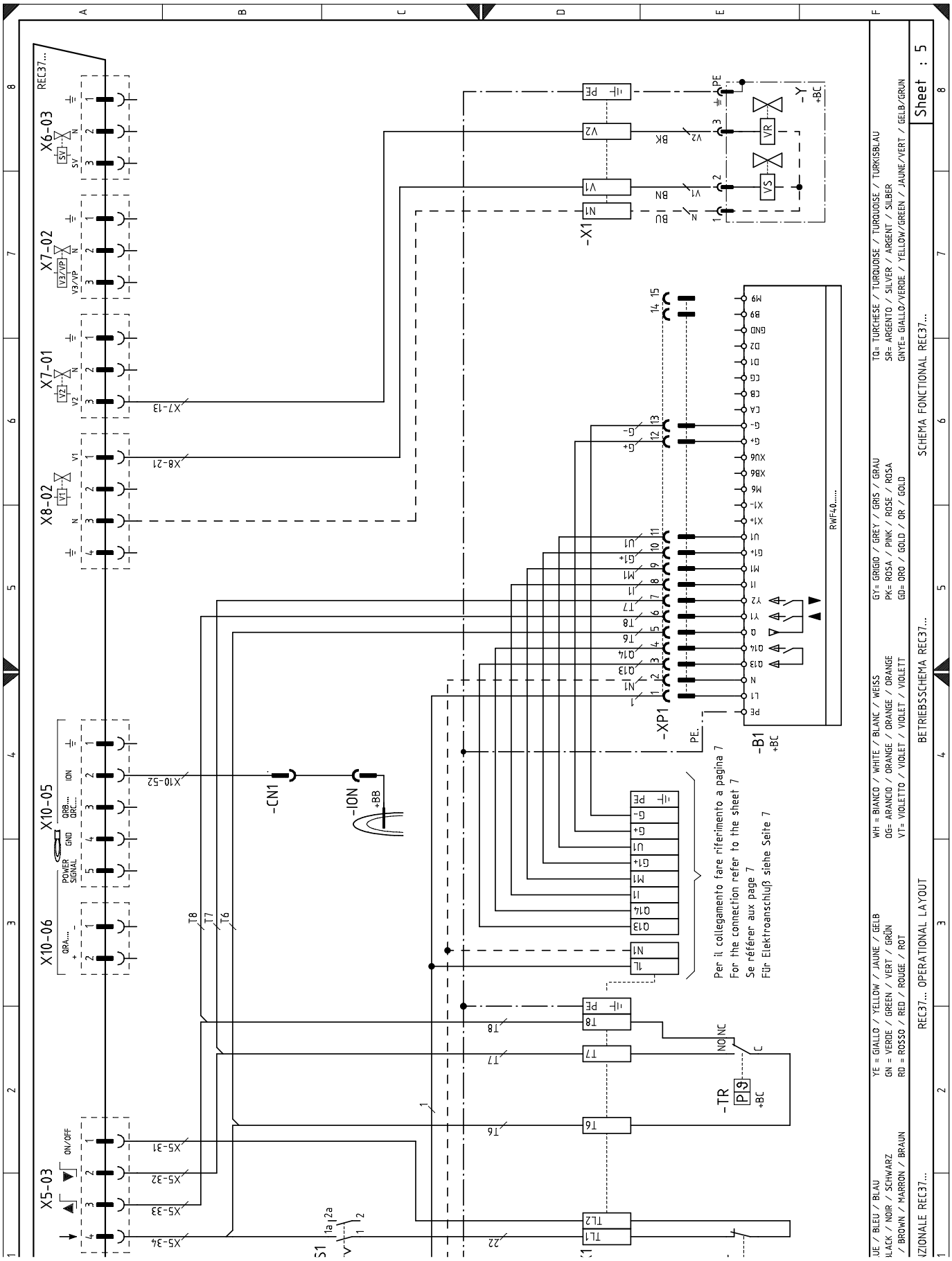
X6-03
X7-02
X7-01
X8-02
X10-05
X10-06
X5-03
-CN1
-ION
-X1
-Y
-XP1
-B1
-TR
Per il collegamento fare riferimento a pagina 7
For the connection refer to the sheet 7
Se référer aux page 7
Für Elektroanschluß siehe Seite 7
Sheet : 5
SCHEMA FONCTIONAL REC37...
BETRIEBSSCHEMA REC37...
REC37... OPERATIONAL LAYOUT

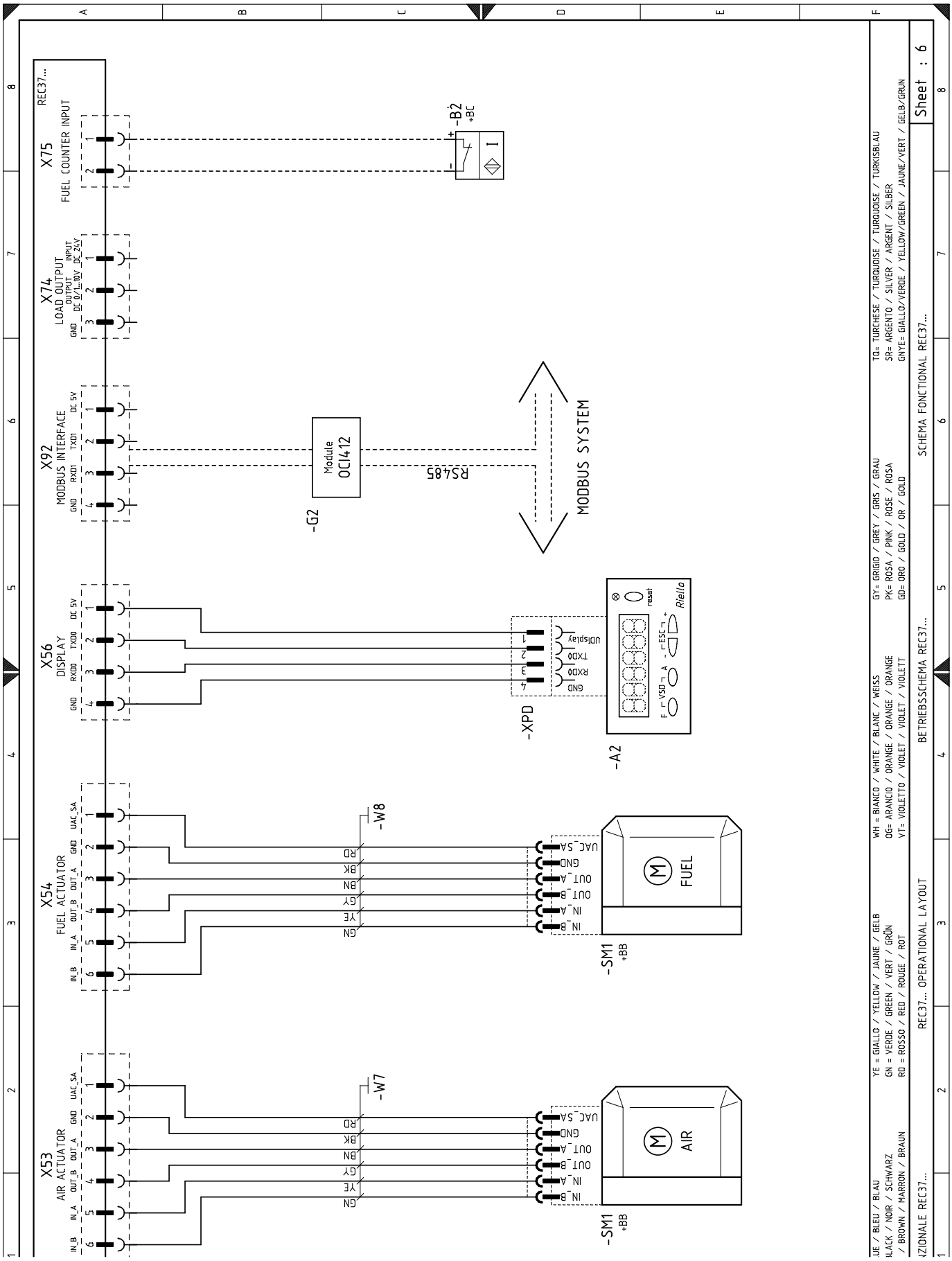
REC37...
X75
FUEL COUNTER INPUT
-B2
+BC
X74
LOAD OUTPUT
GND
OUTPUT
DC 0/1...10V
INPUT
DC 24V
X92
MODBUS INTERFACE
GND
RXD1
TXD1
DC 5V
Module
OCI412
-G2
RS485
MODBUS SYSTEM
X56
DISPLAY
GND
RXD0
TXD0
DC 5V
UDisplay
-XPD
-A2
reset
Riello
X54
FUEL ACTUATOR
IN_B
IN_A
OUT_B
OUT_A
GND
UAC_SA
-W8
RD
BK
BN
GY
YE
GN
IN_B
IN_A
OUT_B
OUT_A
GND
UAC_SA
FUEL
-SM1
+BB
X53
AIR ACTUATOR
IN_B
IN_A
OUT_B
OUT_A
GND
UAC_SA
-W7
RD
BK
BN
GY
YE
GN
IN_B
IN_A
OUT_B
OUT_A
GND
UAC_SA
AIR
-SM1
+BB
YE = GIALLO / YELLOW / JAUNE / GELB
GN = VERDE / GREEN / VERT / GRÜN
RD = ROSSO / RED / ROUGE / ROT
WH = BIANCO / WHITE / BLANC / WEISS
OG= ARANCIO / ORANGE / ORANGE / ORANGE
VT= VIOLETTO / VIOLET / VIOLET / VIOLETT
GY= GRIGIO / GREY / GRIS / GRAU
PK= ROSA / PINK / ROSE / ROSA
GD= ORO / GOLD / OR / GOLD
TQ= TURCHESE / TURQUOISE / TURQUOISE / TURKISBLAU
SR= ARGENTO / SILVER / ARGENT / SILBER
GNYE= GIALLO/VERDE / YELLOW/GREEN / JAUNE/VERT / GELB/GRÜN
REC37... OPERATIONAL LAYOUT
BETRIEBSSCHEMA REC37...
SCHEMA FONCTIONAL REC37...
Sheet : 6

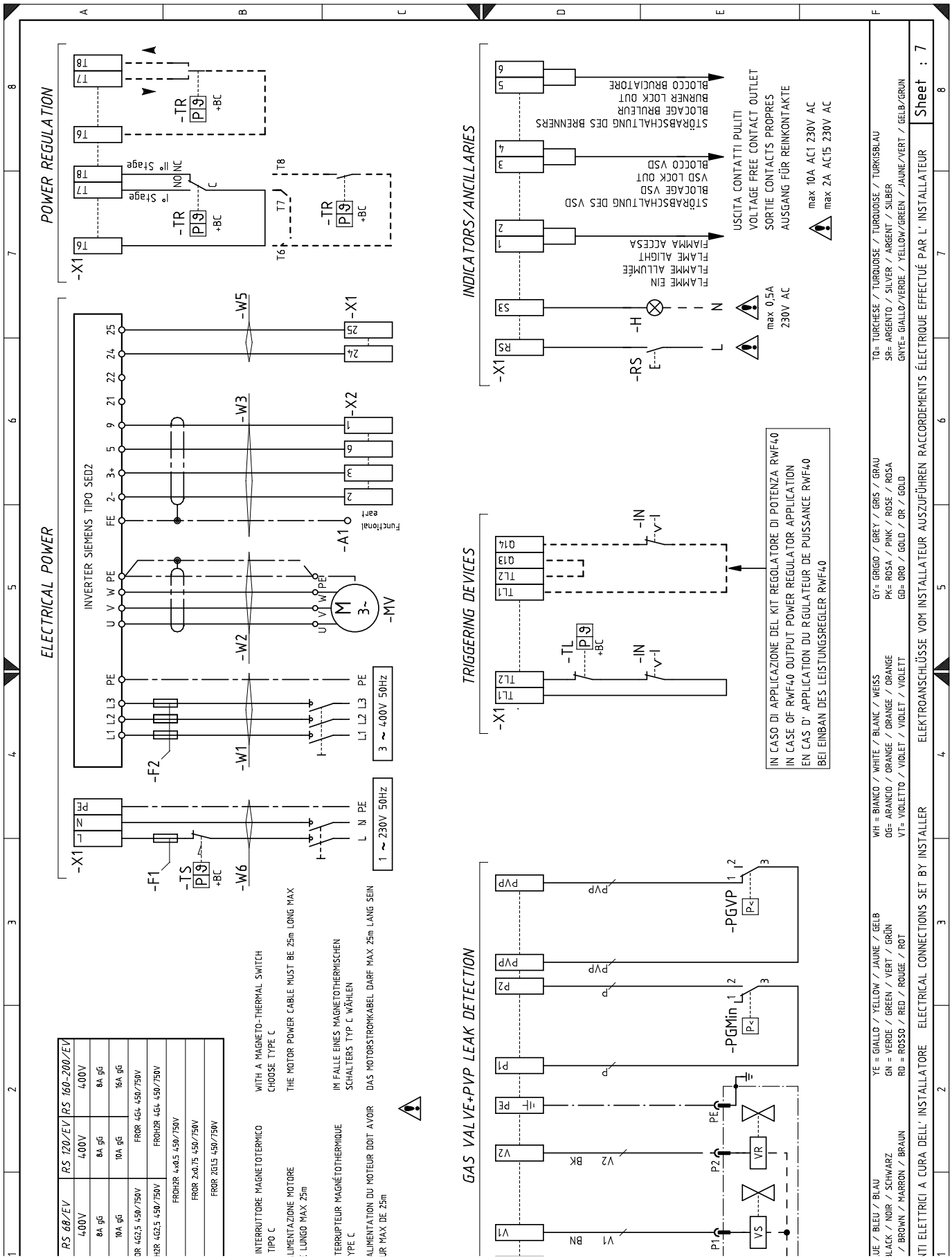

RS 68/EV	RS 120/EV	RS 160-200/EV
400V	400V	400V
8A gG	8A gG	8A gG
10A gG	10A gG	16A gG
FROR 4G2.5 450/750V	FROR 4G4 450/750V	
FROH2R 4G2.5 450/750V	FROH2R 4G4 450/750V	
FROH2R 4x0.5 450/750V		
FROR 2x0.75 450/750V		
FROR 2G1.5 450/750V		

Appendix - Electrical panel layout

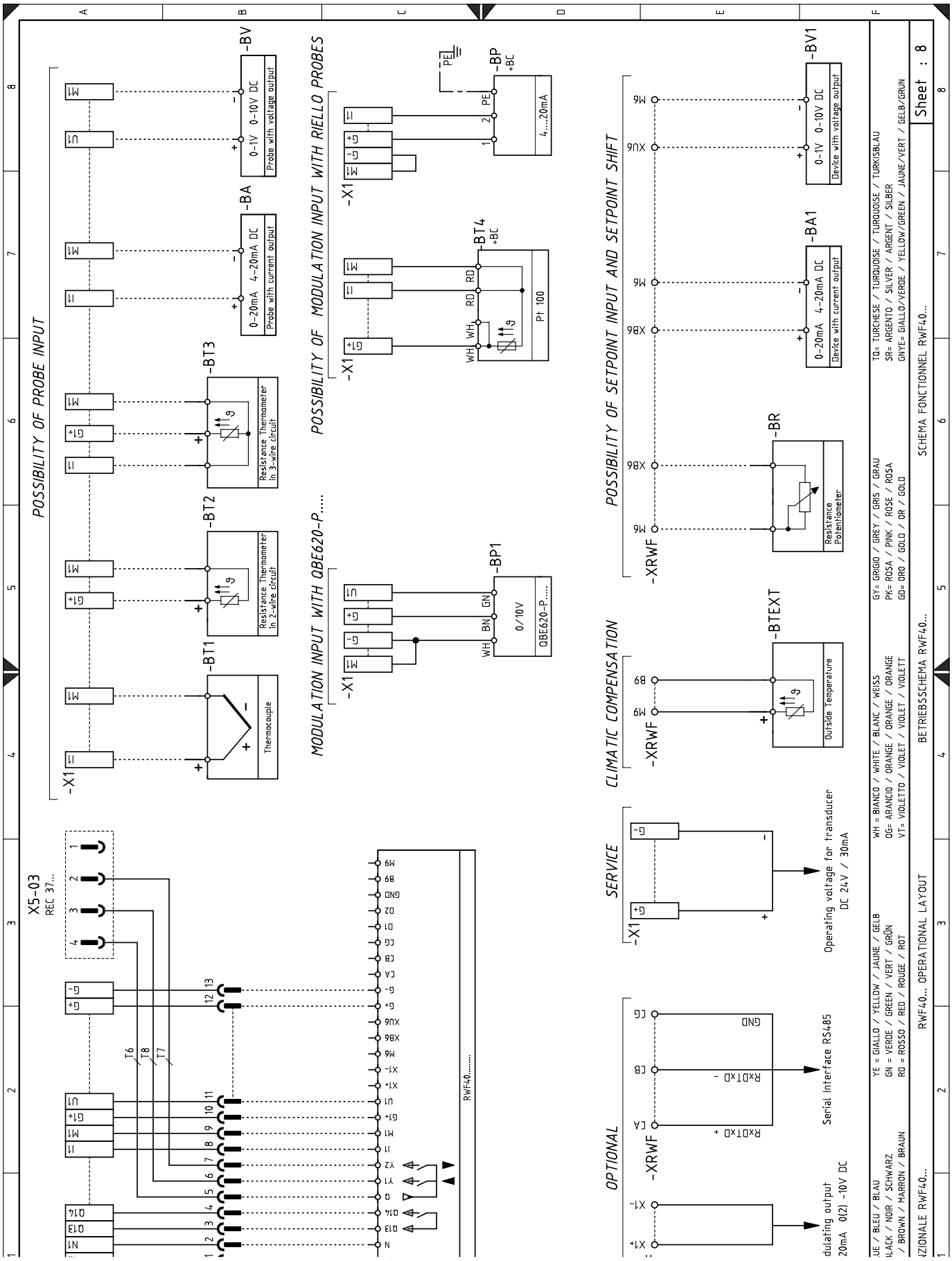

Wiring layout key

A1 - Control box for the air/fuel ratio
A2 - Operator panel
+BB - Burner components
+BC - Boiler components
B - Filter to protect against radio disturbance
B1 - Output regulator RWF40
B2 - Fuel meter
BA - Input in current DC 4...20 mA
BA1 - Input in current DC 4...20 mA to modify remote set-point
BP - Pressure probe
BP1 - Pressure probe
BR - Remote setpoint potentiometer
BT1 - Thermocouple probe
BT2 - Probe Pt100, 2 wires
BT3 - Probe Pt100, 3 wires
BT4 - Probe Pt100, 3 wires
BTEXT - External probe for climatic compensation of the set-point
BV - Input in voltage DC 0...10V
BV1 - Input in voltage DC 0...10V to modify remote set-point
CN1 - Ionisation probe connector
F1 - Fan motor thermal relay
G1 - Load indicator
G2 - Communication interface for Modbus system
H - Remote lockout signal
ION - Ionisation probe
IN - Manual burner arrest switch
K1 - Clean contacts output relay burner switched on
K2 - Clean contacts output relay burner lockout
KM - Fan motor contact maker
MV - Fan motor
PA - Air pressure switch
PE - Burner earth
PGM - Maximum gas pressure switch
PGMin - Minimum gas pressure switch
PGVP - Gas pressure switch for valve leak detection control device
Q1 - Three-phase disconnecting switch
Q2 - Single phase disconnecting switch
RS - Remote burner reset button
S1 - On/off selector
SM1 - Air servomotor
SM2 - Gas servomotor
TA - Ignition transformer
TL - Limit thermostat/pressure switch
TR - Adjustment thermostat/pressure switch
TS - Safety thermostat/pressure switch
XPGVP - Gas pressure switch connector for valve leak detection control device
XRWF - Terminal board for output power regulator RWF40
Y - Gas adjustment valve + gas safety valve